VIRUDHUNAGAR S.VELLAICHAMY NADAR POLYTECHNIC COLLEGE
(Affiliated to Directorate of Technical Education, Chennai 600 025)
Virudhunagar - 626 001

MISSION

"Our mission is to produce disciplined and Quality Plastic technocrats through academic programme of noted excellence to serve the society"

VISION

"To be a department of excellence in Plastic Technology Education and Training of individuals focusing on the needs of the Nation and Society in tune with Technological Developments"

COURSE MATERIAL		
PROGRAMME	FIRST YEAR BASIC ENGINEERING	
SCHEME	N1 Scheme	
TERM	I Term	
COURSE CODE	N1BE201	
COURSE NAME	ENGINEERING GRAPHICS	
PREPARED BY	VERIFIED BY	APPROVED BY
B.PADMANABAN		

DEPARTMENT OF ENGINEERING GRAPHICS

ENGINEERING GRAPHICS - DETAILED SYLLABUS

UNIT I: DRAWING OFFICE PRACTICE AND DIMENSIONING 15 HRS

1.1 Drawing office practice

Importance of engineering drawing as a graphic communication – drawing practice as per BIS code – drawing instruments: drawing End, mini drafter, compass, divider, protractor, drawing sheets, drawing pencils, set squares etc., – title block – layout and folding of drawing sheets.

Lettering and numbering as per BIS – importance of legible lettering and numbering – single stroke letters – upper case and lower case letters – slanting letters – general procedures for lettering and numbering – height of letters – guidelines – practices. Scales – Study of scales – full size scale, reducing scale and enlarging scales.

1.2 Dimensioning

Dimensioning – need for dimensioning – dimensioning terms and notations as per BIS – dimension line, extension line and leader line – dimensioning systems – methods of placement of dimensions – uni-directional and aligned systems – Important dimensioning rules – dimensioning of common features – diameters, radii, holes, chamfers – addition of letters and symbols – parallel, chain and progressive dimensioning – practice of dimensioning the given drawing as per BIS code (one view of the object).

UNIT II: GEOMETRIC CONSTRUCTION AND CONSTRUCTION OF CONICS 18 HRS

2.1 Geometric Constructions

Bisect a straight line – bisect an arc – bisect an angle – divide a straight line into any number of equal parts – divide the circle into number of equal divisions – construct an arc touching two lines at any angle – construct an arc touching two arcs – construction by inscribe and circumscribe a circle and by angle.

2.2 Constructions of conics

Conic sections – definition of locus, focus, directrix, axis, vertex and eccentricity – practical applications of ellipse, parabola and hyperbola. **Ellipse:** Construction of ellipse by concentric circle method, rectangular method when major and minor axis are given and eccentricity method when focus and directrix are given – drawing tangent and normal – exercises in practical applications. **Parabola:** Construction of parabola by rectangular method, parallelogram method when major and minor axis are given and eccentricity method when focus and directrix are given – drawing tangent and normal – exercises in practical applications. **Hyperbola:** Construction of hyperbola by eccentricity method when focus and directrix are given – drawing tangent and normal – exercises in practical applications.

UNIT III – CONSTRUCTION OF POLYGONS AND SPECIAL CURVES 18 HRS

3.1 constructions of polygons

Construction of regular polygon: triangle, square, pentagon and hexagon – various positions – side of the polygon is parallel, perpendicular and inclined to principal planes.

3.2 constructions of special curves

Geometric curves: Definition, practical applications and construction of cycloid – epicycloid – hypocycloid – involute – archimedean spiral – helix – exercises.

UNIT IV –ORTHOGRAPHIC PROJECTONS 27 HRS

4.1 Introduction – projection terms – orthographic projection – planes of projection – principal orthographic views – designation of views – four quadrants – first angle projection – third angle projection – symbols for the first and the third angle projections – comparison of first and third angle projections – arrangement of views in the first and the third angle projections – Simple exercises in first and third angle projections with minimum three views of simple components.

4.2 Draw the projections of the simple engineering components using first angle projection – exercises in drawing orthographic views – three views – front view, top view and right / left side views in full size / half size. (For End Examinations only two views can be asked)

UNIT I: DRAWING OFFICE PRACTICE AND DIMENSIONING

INTRODUCTION

1.1 Drawing

The graphical representation of any object or idea can be termed as drawing. A drawing can be prepared either using free hand or using engineering instruments or using computer program.

1.2 Types of Drawing

1. Artistic Drawing
2. Engineering Drawing

1.2.1 Artistic Drawing

The drawing representing any object or idea which is sketched in free hand using imagination of artist and in which proper scaling and dimensioning is not maintained is called an artistic drawing. Example: Painting, Posters, arts etc.

1.2.2 Engineering Drawing

Engineering drawing can be defined as a graphical language used by engineers and other technical personnel associated with the engineering profession which fully and clearly defines the requirements for engineered items. It is a two dimensional representation of a three dimensional object.

In other words, The art of representing a real or imaginary object precisely using some graphics, symbols, letters and numbers with the help of engineering drawing instruments is called engineering drawing.

The art of representing engineering objects such as buildings, roads, machines, circuits etc. on a paper is called engineering drawing.

It is used by engineers and technologists. An engineering drawing provides all information about size, shape, surface type, materials etc. of the object. Example: Building drawing for civil engineers, Machine drawing for mechanical engineers, Circuit diagrams for electrical and electronics engineers, computer graphics for one and all etc.

Table 1.1 Differences between Artistic and Engineering Drawing

Artistic Drawing	Engineering Drawing
Purpose of artistic drawing is to convey emotion or artistic sensitivity in some way.	Purpose of engineering drawing is to convey information about engineering object or idea.
Can be understood by all.	Need some specific knowledge or training to understand.
Scale maintaining is not necessary	Scale maintaining is necessary
No special requirement of engineering instruments.	Engineering drawing instruments is used to make the drawing precise.
An artistic drawing may not be numerically specific and informative.	An engineering drawing must be numerically specific and informative.
Standard drawing code need not to be followed.	Standard drawing code (like ISO, ANSI, BIS etc,) must be maintained.

1.3 Purpose of Engineering drawing

It is very difficult and complex to explain some certain engineering requirements in word. In such cases well dimensioned and properly scaled graphics can make it easy to understand that for technical personnel. Engineering drawing serves this purpose. Any product that is to be manufactured, fabricated, assembled, constructed, built, or subjected to any other types of conversion process must first be designed. To make the outcome from the design understandable to any third party engineering drawing is the best way.

1.4 Applications of Engineering Drawing

Engineering drawing is an essential part of almost all engineering projects. Some important uses of engineering drawing are mentioned below:

1. It is used in ships for navigation.
2. For manufacturing of machines, automobiles etc.
3. For construction of buildings, roads, bridges, dams, electrical and telecommunication structures etc.
4. For manufacturing of electric appliances like TV, phone, computers etc.

1.4 Elements of Engineering Drawing

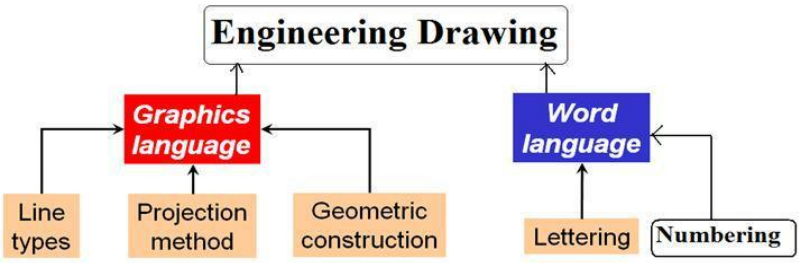

1.5 Drawing Standards

An engineering drawing should be well specified and universally acceptable. That's why there are some specified rules for engineering drawing. These rules may vary slightly for different regions. There are some drawing standards or drawing codes that accumulates the rules of engineering drawing for a certain region. Well-known drawing codes and their application region is expressed below:

Standard Codes

Country	Code	Full name
USA	ANSI	American National Standard Institute
Japan	JIS	Japanese Industrial Standard
UK	BS	British Standard
Australia	AS	Australian Standard
Germany	DIN	Deutsches Institute for Normung
India	BIS	Bureau of Indian Standards
	ISO	International Standards Organization

1.6 Drawing Instruments

The most common instruments used for engineering drawing are:

1. Drawing Board
2. Drawing paper
3. Pencil
4. Rubber/Eraser
5. T- square
6. Set-square
7. Instrument box
8. Protractor
9. Compass
10. Scales
11. Pins and clips
12. Adhesive tapes
13. French curves etc

1.6.1 Drawing Board

- It is a board or platform rectangular in shape.
- Size of drawing board need to be larger than that of drawing paper.
- It is made of wood.
- Top surface should be smooth.

Standard drawing boards are designated as follows as per IS:1444-1989.

Sl. No.	Designation	Size (mm)
1	D0	1500 x 1000 x 25
2	D1	1000 x 700 x 25
3	D2	00 x 500 x 15
4	D3	500 x 350 x 15

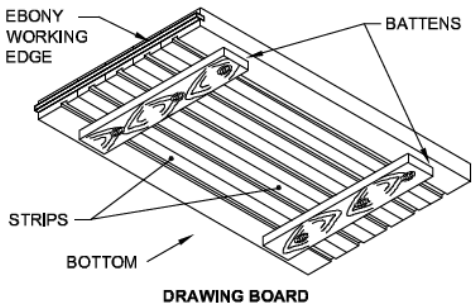

1.6.2 Mini-Draughter

Mini-draughter consists of an angle formed by two arms with scales marked and rigidly hinged to each other. It combines the functions of T-square, set-squares, scales and protractor. It is used for drawing horizontal, vertical and inclined lines, parallel and perpendicular lines and for measuring lines and angles.

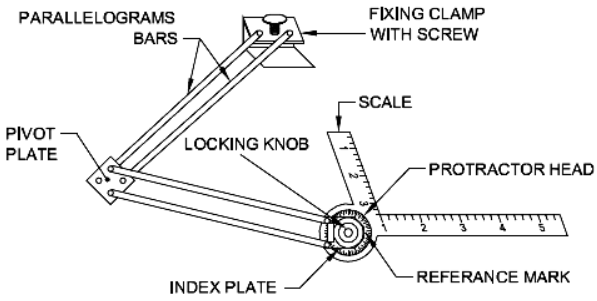

1.6.3 Drawing Sheet

Drawing sheet is the paper, on which drawing is to be made. All engineering drawings are made on sheets of paper of strictly defined sizes, which are set forth in the respective standards. The use of standard size saves paper and ensures convenient storage of drawings.

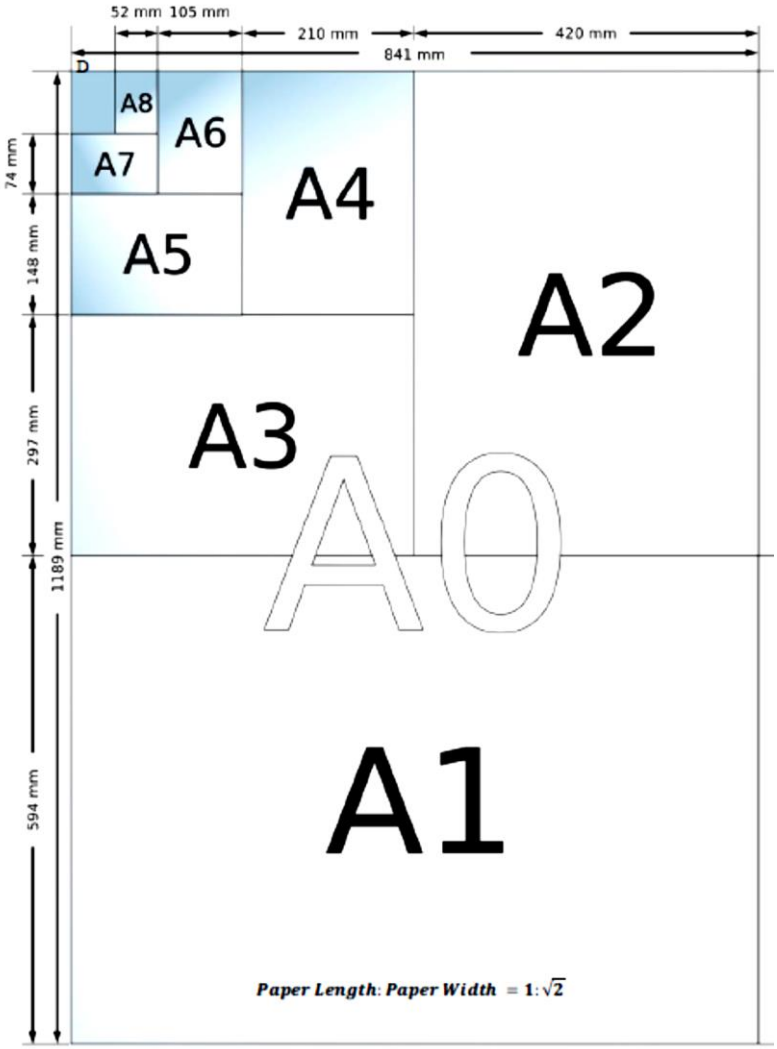

Desirable properties a good drawing Sheet:

- It should be smooth and uniform in thickness.
- It should be thick, strong and tough.
- Fibers of drawing paper should not be disintegrated when a good eraser is used on it.

Drawing Paper Types:

1. Detail Paper (used for pencil work).
2. White drawing paper (used for finished drawing)
3. Tracing paper (used for both pencil and ink work and useful for replicating a master copy)

Paper Size:

As per IS : 10711 – 1983 are given below,

Designation	Trimmed size
A0	841 x 1189
A1	594 x 841
A2	420 x 594
A3	297 x 420
A4	210 x 297
A5	148 x 210

Layout of drawing sheet:

The layout of drawing sheet facilities easy reading.

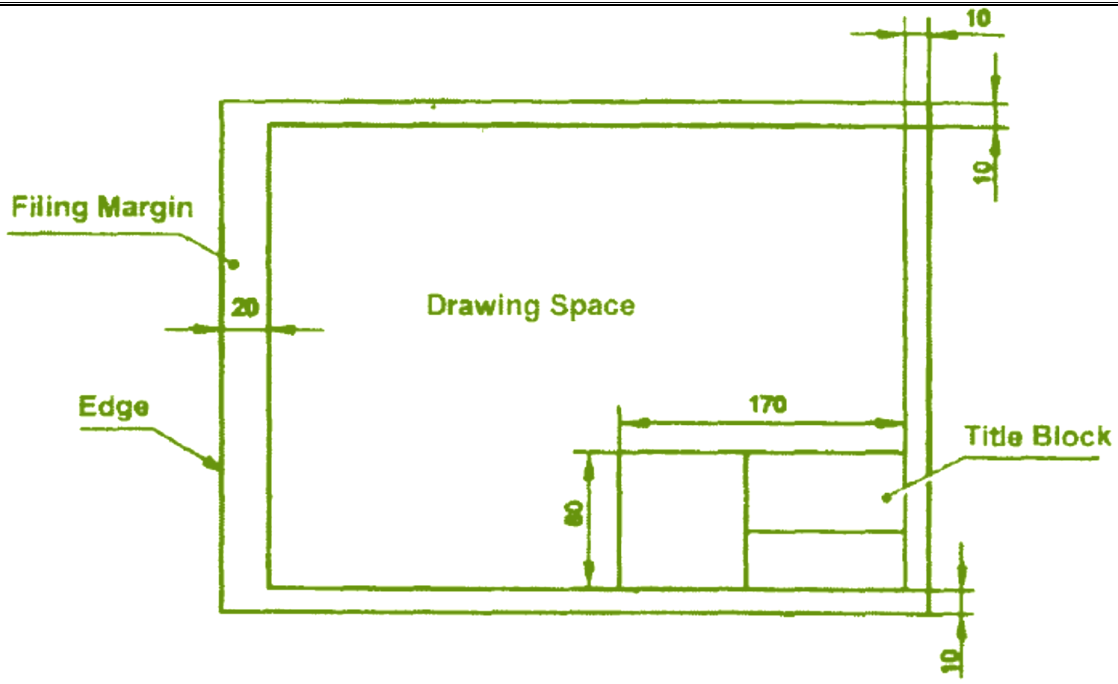

Title Block:
The title block should lie within the drawing space at the bottom right hand comer of the sheet. The title block can have a maximum length of 170 mm and width of 65mm providing the following information.

- Title of the drawing.
- Drawing number.
- Scale.
- Symbol denoting the method of projection.
- Name of the firm, and
- Initials of staff, who have designed, checked and approved.

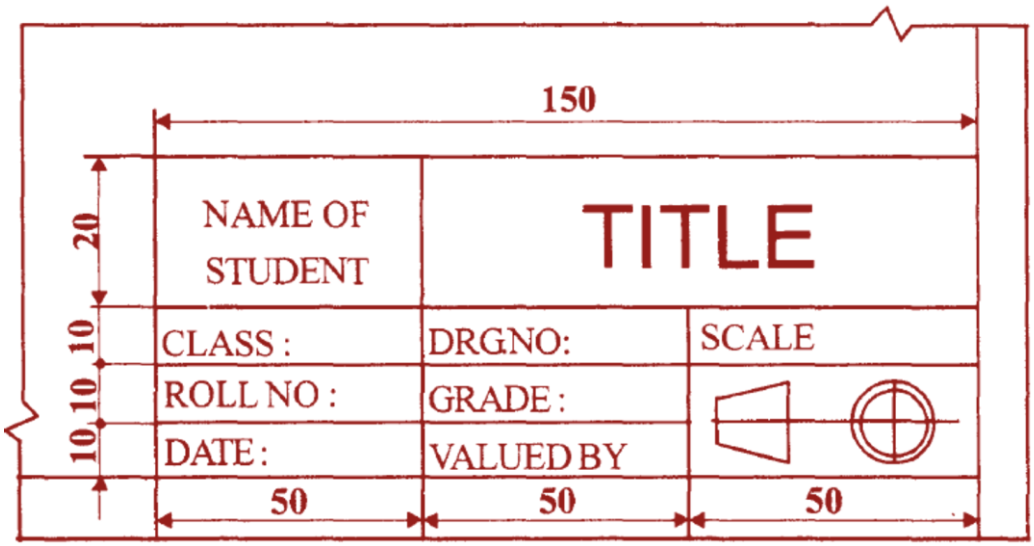

Folding of Drawing Sheets

- IS : 11664 - 1999 specifies the method of folding drawing sheets. Two methods of folding of drawing sheets, one suitable for filing or binding and the other method for keeping in filing cabinets are specified by BIS.
- In both the methods of folding, the Title Block is always visible.
- The figure shows the method in which drawing sheets may be unfolded and refolded, without the necessity of removal from the file.

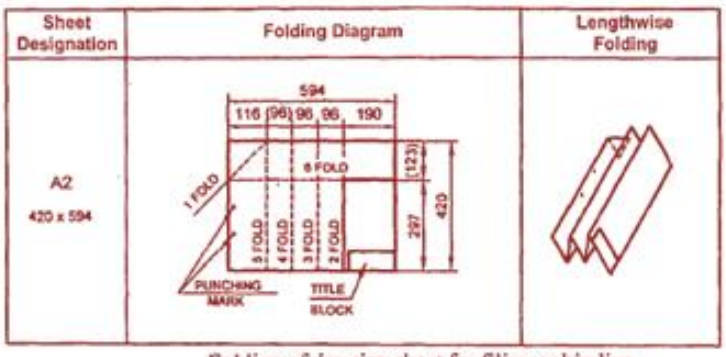

Folding of drawing sheet for filing or binding

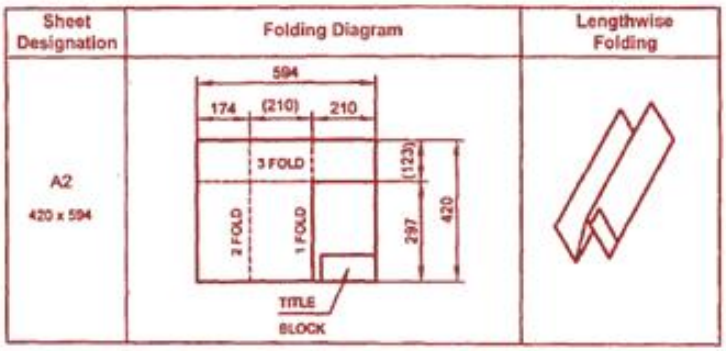

Folding of drawing sheet for storing in filing cabinet

1.6.4 Pencil:

Pencils with leads of different degrees of hardness or grades are available in the market. The hardness or softness of the lead is indicated by **3H, 2H, H, HB, B, 2B, 3B**, etc. The grade HB denotes medium hardness of lead used for general purpose. The hardness increases as the value of the numeral before the letter H increases. The lead becomes softer, as the value of the numeral before B increases.

- *HB Soft grade for Border lines, lettering and free sketching*
- *H Medium grade for Visible outlines, visible edges and boundary lines*
- *2H Hard grade for construction lines, Dimension lines, Leader lines, Extension lines, Centre lines, Hatching lines and Hidden lines.*

1.6.5 T-square:

1. Used to draw horizontal straight line.
2. Used to guide the triangles when drawing vertical and inclined lines.

1.6.6 Set-square:

1. Used to construct the most common angles (i.e. 30^0, 45^0 and 60^0) in technical drawings.
2. Used to draw parallel and perpendicular lines quickly and conveniently.

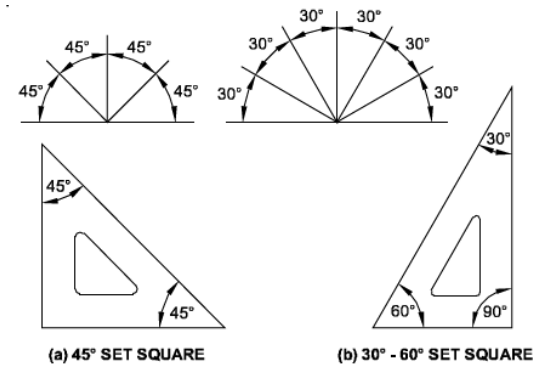

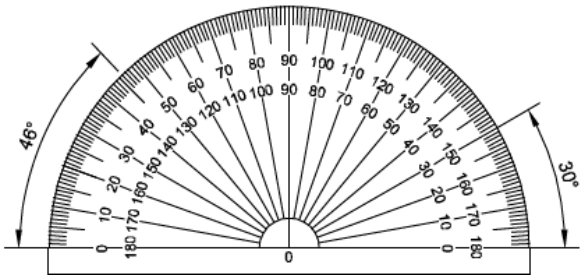

1.6.7 Protractor

It is used for laying out and measuring angle.

1.6.8 Compass

It is used to draw circles and arcs both in pencil and ink. It consists of two legs pivoted at the top. One leg is equipped with a steel needle attached with a screw, and other shorter leg is, provided with a socket for detachable inserts.

1.6.9 Dividers:

Used chiefly for transferring distances and occasionally for dividing spaces into equal parts. i.e. for dividing curved and straight lines into any number of equal parts, and for transferring measurements.

Compass and Divider

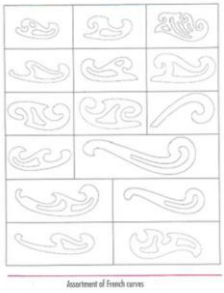

French Curves

1.6.9 French curve:

It is used to draw irregular curves that are not circle arcs. The shape varies according to the shape of irregular curve.

1.7 Lines:

Just as in English textbook the correct words are used for making correct sentences; in Engineering Graphics, the details of various objects are drawn by different types of lines. Each line has a definite meaning and sense to convey.

- **Visible Outlines, Visible Edges:** (Continuous wide lines) the lines drawn to represent the visible outlines/ visible edges / surface boundary lines of objects should be outstanding in appearance.
- **Dimension Lines (Continuous narrow Lines):** Dimension Lines are drawn to mark dimension.
- **Extension Lines (Continuous narrow Lines):** There are extended slightly beyond the respective dimension lines.
- **Construction Lines (Continuous narrow Lines):** These are drawn for constructing drawings and should not be erased after completion of the drawing.
- **Hatching / Section Lines (Continuous Narrow Lines):** These are drawn for the sectioned portion of an object. These are drawn inclined at an angle of 45° to the axis or to the main outline of the section.
- **Guide Lines (Continuous Narrow Lines):** These are drawn for lettering and should not be erased after lettering.
- **Break Lines (Continuous Narrow Freehand Lines):**Wavy continuous narrow line drawn freehand is used to represent break of an object.
- **Break Lines (Continuous Narrow Lines With Zigzags):** Straight continuous narrow line with zigzags is used to represent break of an object.
- **Dashed Narrow Lines (Dashed Narrow Lines):**Hidden edges / Hidden outlines of objects are shown by dashed lines of short dashes of equal lengths of about 3 mm, spaced at equal distances of about 1 mm. the points of intersection of these lines with the outlines / another hidden line should be clearly shown.
- **Center Lines (Long-Dashed Dotted Narrow Lines):** These are draWn at the center of the drawings symmetrical about an axis or both the axes. These are extended by a short distance beyond the outline of the drawing.
- **Cutting Plane Lines:** Cutting Plane Line is drawn to show the location of a cutting plane. It is long-dashed dotted narrow line, made wide at the ends, bends and change of direction. The direction of viewing is shown by means of arrows resting on the cutting plane line.
- **Border Lines:** Border Lines are continuous wide lines of minimum thickness 0.7 mm.

Illustration	Application	Pencil
Thick	Outlines, visible edges, surface boundaries of objects, margin lines	H
Continuous thin	Dimension lines, extension lines, section lines leader or pointer lines, construction lines, boarder lines	2H
Continuous thin wavy	Short break lines or irregular boundary lines – drawn freehand	2H
Continuous thin with zig-zag	Long break lines	2H
Short dashes, gap 1, length 3 mm	Invisible or interior surfaces	H
Short dashes	Center lines, locus lines Alternate long and short dashes in a proportion of 6:1,	2H
Long chain thick at end and thin elsewhere	Cutting plane lines	H / 2H
Continuous thick border line	Border	HB

1.8 LETTERING & NUMBERING

Lettering and Numbering is defined as writing of titles, sub-titles, dimensions, etc., on a drawing.

1.8.1 Importance of Lettering:

To undertake production work of an engineering component as per the drawing, the size and other details are indicated on the drawing. This is done in the form of notes and dimensions. Main Features of Lettering are legibility, uniformity and rapidity of execution. Use of drawing instruments for lettering consumes more time. Lettering should be done freehand with speed. Practice accompanied by continuous efforts would improve the lettering skill and style. Poor lettering mars the appearance of an otherwise good drawing.

1.8.2 Size of Letters

- Size of Letters is measured by the height h of the CAPITAL letters as well as numerals.
- Standard heights for CAPITAL letters and numerals recommended by BIS are given below: 1.8, 2.5, 3.5, 5, 6, 7, 10, 14 and 20 mm

Note: Size of the letters may be selected based upon the size of drawing.

1.8.3 Guide Lines:

In order to obtain correct and uniform height of letters and numerals, guide lines are drawn, using 2H pencil with light pressure. HB grade conical end pencil is used for lettering.

The following are some of the guide lines for lettering

- Drawing numbers, title block and letters denoting cutting planes, sections are written in 10mm size.
- Drawing title is written in 7 mm size.
- Hatching, sub-titles, materials, dimensions, notes, etc., are written in 3.5 mm size.
- Space between lines = 3/4 h
- Space between words may be equal to the width of alphabet M or 3/5 h.

1.8.4 Procedure for Lettering:

1. Thin horizontal guide lines are drawn first at a distance ' h' apart.
2. Lettering Technique: Horizontal lines of the letters are drawn from left to right. Vertical, Inclined and curved lines are drawn from top to bottom.
3. After lettering has been completed, the guidelines are not erased.

Specifications	Value	Size						
Capital Letter Height	h	2.5	3.5	5	7	10	14	20
Lowercase Letter Height	a = (5/7) h	-	2.5	3.5	5	7	10	14
Thickness of Lines	b = (1/14) h	0.18	0.25	0.35	0.5	0.7	1	1.4
Spacing between Characters	c = (1/7) h	0.35	0.5	0.7	1	1.4	2	2.8
Min.Spacing between words	d = (3/7) h	1.05	1.5	2.1	3	4.2	6	8.4
Min. Spacing between Base Lines	e = (10/7) h	3.5	5	7	10	14	20	28

Recommended Size (height h) of Letters / Numerals	
Main Title	5 mm, 7 mm, 10 mm
Sub-Titles	3.5 mm, 5 mm
Dimensions, Notes, etc.	2.5 mm, 3.5 mm, 5 mm

Single stroke inclined letters of ratio 7:6, 7:5, 7:4, 7:3, 7:1

Single stroke vertical letters of ratio 7:6, 7:5, 7.4, 7:3, 7:1

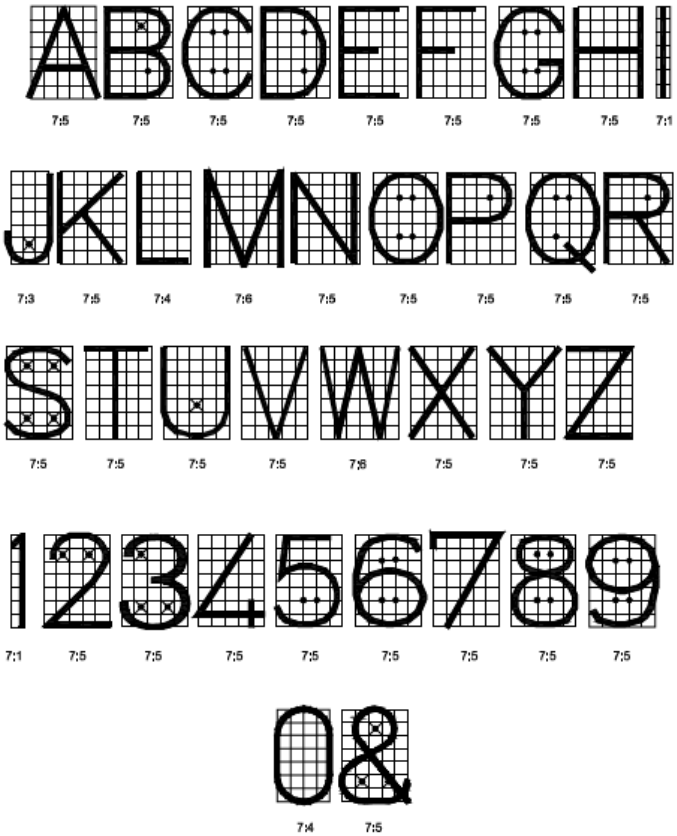

EXAMPLE:
Write 10 mm single stroke capital letters and numerals in vertical style using either scale or setsquare and by free hand.

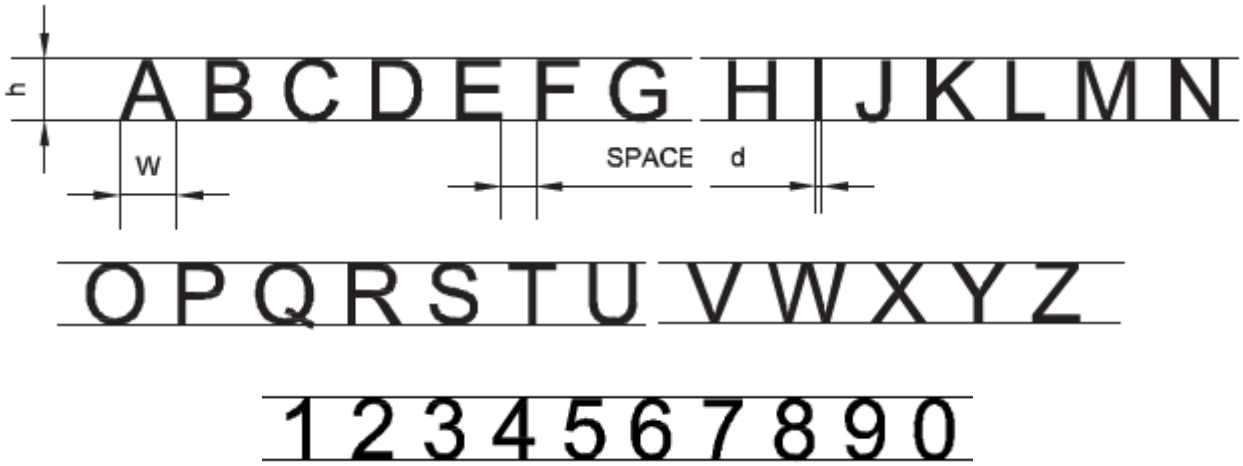

Write 10 mm single stroke Slanting / Inclined capital letters and numerals using either scale or setsquare and by free hand.

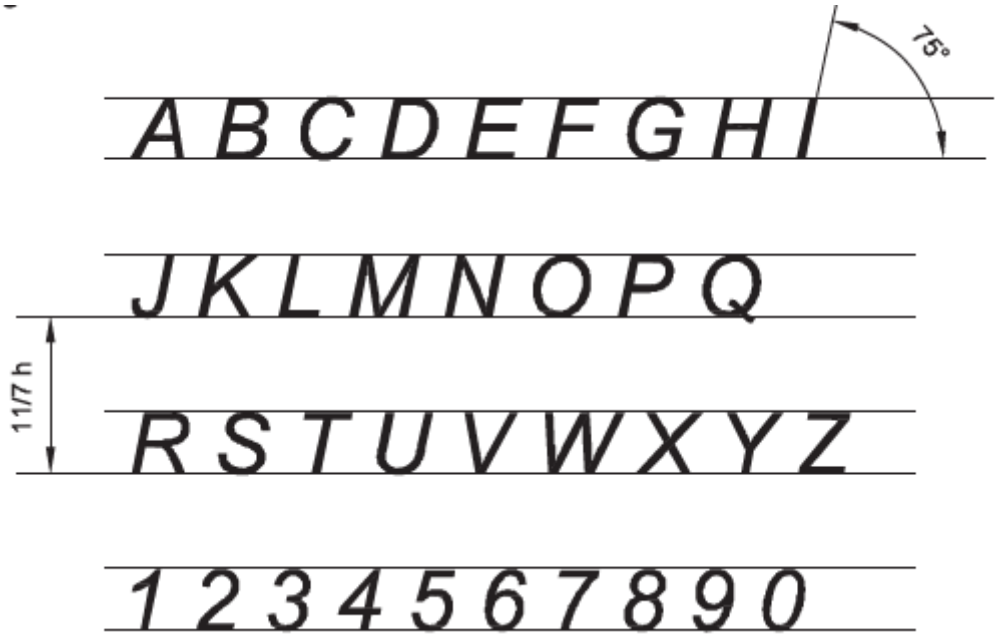

Sentence Composition
Leave the space between words equal to the spacerequires for writing a letter **"O".**

Example

ALL ODIMENSIONS OARE OINO MILLIMETERS

1.9 Drawing Scales
Scale is defined as the ratio of the linear dimension (Length and size) of an element of an object shown in the drawing to the real linear dimension of the same element of the object.

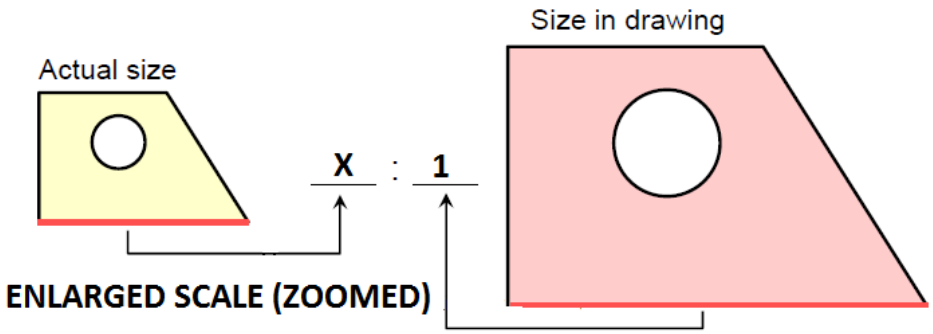

A suitable scale is always chosen to draw the drawings of big as well as small objects in proportionally smaller or larger sizes. Thus, scale can be expressed in the following three ways.

- Full size scale
- Reducing scale
- Increasing scale

Full size scale:

- If actual dimension of an object is shown in the drawing then the scale used is said to be full size scale.
- IT can be represented as 1cm=1cm.

Reducing scale

- If actual dimension of an object is reduced so as to accommodate that object in the drawing to be drawn on the provided drawing sheet, then the scale used is called reducing scale.
- Such scales are used for drawing the large machine parts, buildings, bridges, survey maps, etc.
- Civil Engineers and Architects generally use reducing scale.
- This scale is represented as for example, 1cm=2m. This indicates that the linear dimension of 2m
- of an actual object is represented by 1cm in the drawing of that object.

Increasing or Enlarging scale

- When the drawings of very small objects are made larger than their actual dimension in the drawing sheet, the scale used is called increasing/enlarging scale.
- Such scales are used for drawing small machine parts, mechanical/electronic instruments, watches, etc.

Designation of a scale consists of the word "SCALE" followed by the indication of its ratio, as follow,

- SCALE 1:1for full size SCALE **X**:1
- for ***enlargement*** scales (X > 1)SCALE 1:**X**
- for ***reduction*** scales(X > 1)

Dimension numbers shown in the drawing are correspond to "true size" of the object and they are independent of the scale used in creating that drawing.

2.DIMENSIONING

Objectives

Objectives of studying dimensioning are:

- To know the purposes of dimensioning
- To understand the differences between dimension line, extension line, leaders etc.
- To know the guidelines of dimension system.
- To learn to draw the dimension of technical drawings as per the standard

2.1 Purpose of Dimensioning

The purpose of dimensioning is to provide a clear and complete description of an object. A complete set of dimensions will permit only one interpretation needed to construct the part. In some cases, engineering drawing becomes meaningless without dimensioning. Maintaining scale only does not make a drawing sufficient for manufacturer. By direct measurement from drawing according to the scale is very laborious, time-consuming and such a part cannot be manufactured accurately.

In general dimensioning system provides following information

- Sizes and locations of features
- Material's type
- Number required
- Kind of surface finish
- Manufacturing process
- Size and geometric tolerance

2.2 General Conditions for Dimensioning

- **Accuracy:** correct values must be given.
- **Clearness:** dimensions must be placed in appropriate positions.
- **Completeness**: nothing must be left out, and nothing duplicated.
- **Readability**: the appropriate line quality must be used for legibility.

2.3 Elements of Dimension System

- Extension lines
- Dimension lines
- Arrowheads
- Leaders
- Texts, numbers and symbols.

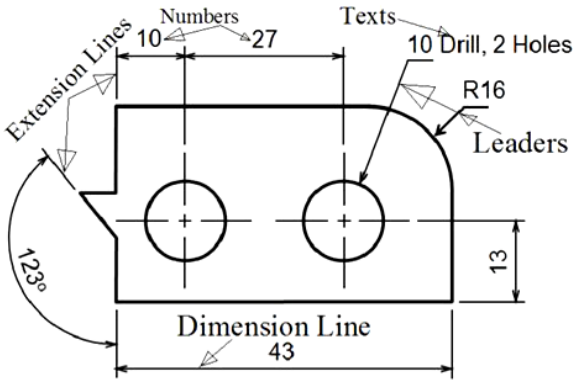

2.4 Rules for Dimensioning

2.4.1 General Rules for Dimensioning

- Dimensioning should be given within the extent of the view in general.
- Dimensioning should not be duplicated in other view.
- No subtraction or addition should be required to define or locate a feature.
- Dimensioning should be inserted on relatively larger available view to make it clear.
- One system of dimensions either unidirectional or aligned has to be used throughout the drawing.
- Dimensioning to the hidden lines should be avoided, in general.
- Dimensioning should be made on the view, which represents the shape of the part best.
- A zero must be placed before decimal point.

2.4.2 Rules of Extension Lines

Extension lines are the lines that indicate the point or line or space on the drawing to which dimension is being applied. Following conditions should be maintained while inserting an extension line:

- A gap of 1mm has to be kept between extension line and visible line.
- An extension line should be extended about 3mm from the outmost dimension line.
- Extension lines may cross each other without break.
- Center lines can be used as extension lines.
- Extension lines are drawn usually perpendicular to dimension lines. But for overcrowded drawing they can be drawn at an oblique angle as well.

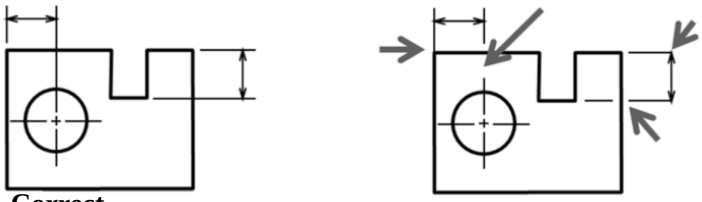

Correct **Wrong**

Extension Lines in Proper Way

2.4.3 Rules of Dimension Lines

Dimension lines are the lines that show the dimensions of a specific portion indicated by extension lines. Following conditions should be maintained while inserting a dimension line:

- Dimension line should be approximately 10mm away from visible line.
- Spacing between consecutive parallel dimension lines may also be kept as 10mm.
- Dimension lines are broken near the middle to allow space for dimensions.
- As far as possible dimension lines should be placed outside the view.
- Dimension lines should not cross each other.
- Center lines should never be used as dimension lines.
- If space between extension lines is very short for inserting arrows, the arrows may be provided outside the extension lines.

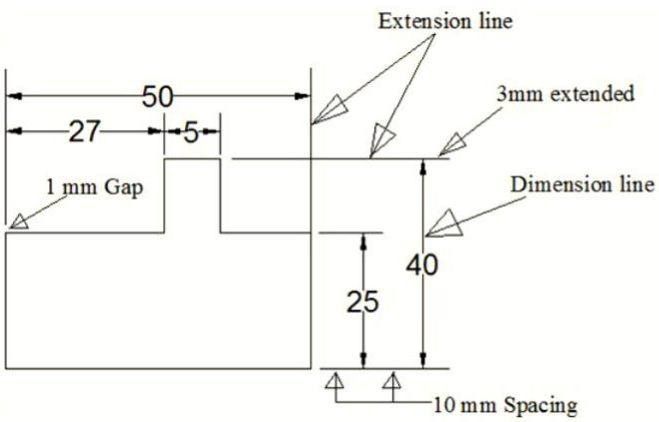

Dimension and Extension lines

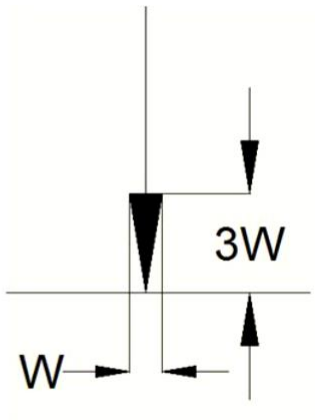

Arrowhead

2.4.4 Rules of Arrowhead

Arrowheads are used at both ends of dimension lines and at the ends of leaders. They are usually drawn freehand.

Following conditions should be maintained while inserting an arrowhead:

- As far as possible all arrowheads should be identical in shape and size throughout the drawing.
- An approximate ratio of the length to width of arrowhead as 3:1 should be maintained.
- Arrowheads must touch the line. It must not be either away from the line or cross the line.

2.4.5 Rules of Leader line

Leader lines are used in engineering drawing for dimensioning of arcs, circles etc. They are also used to present note, symbols, item number or part number etc.

Following conditions should be maintained while inserting a leader line:

- A leader line should always be inclined at an angle of 60^0 preferably and 45^0 occasionally.
- The length of horizontal bar should be 3mm.
- A leader line should be terminated by either an arrowhead or a small dot of about 1.5mm diameter.
- Leader lines should not cross each other, however, they may be drawn parallel to each other with a common horizontal bar.
- To direct a circle or an arc the leader should be so drawn, if it is imagined to extend it must pass through the center of the circle or the arc.

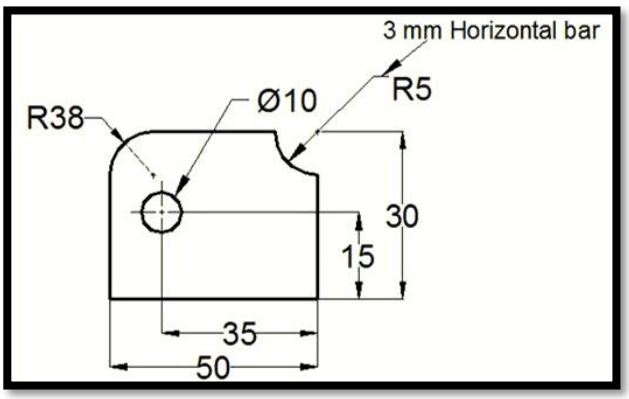

- All notes, symbols and dimensions in a leader need to be provided in horizontal direction.

2.5 Direction of Dimensions

Direction of dimensions is chosen in either of the two systems:

A. **Unidirectional system:** All the dimensions are oriented to be read from the bottom of drawing. It is also known as horizontal system. This system is preferred to aligned system.

B. **Aligned system:** All the dimensions are oriented to be read from the bottom or right side of the drawing.

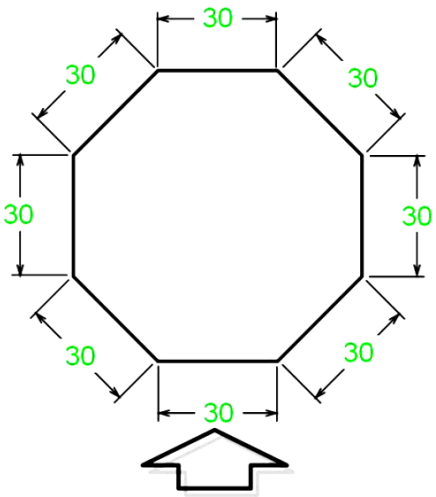

Unidirectional System

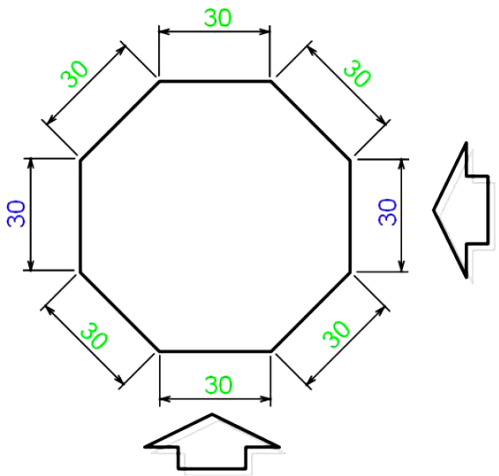

Aligned System

2.6 Technique of Dimensioning

There are two basic steps in dimensioning objects, regardless of the type of object.

- **Step 1**: Apply the size dimensions. These are dimensions which indicate the overall size of the object and the various features which make up the object.

- **Step 2:** Apply the locational dimensions. Locational dimensions are dimensions which locate various features of an object from some specified datum or surface. Figure gives examples of size and location dimensions**.**

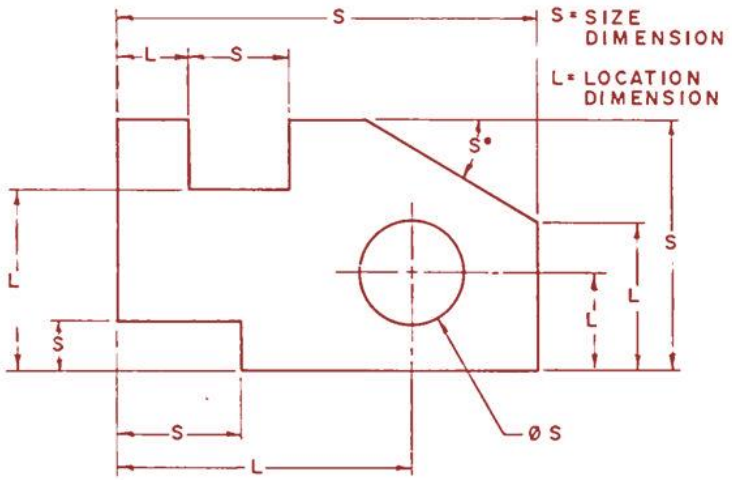

2.7 Dimensioning in Limited Space

If space between the extension lines is too small to insert the dimension digits, they may be provided al left or right side of extension lines. Sometimes the space may be even too small to insert arrows, in such case dimensions as well as arrows can be provided on outside of the extension lines as shown in Fig.

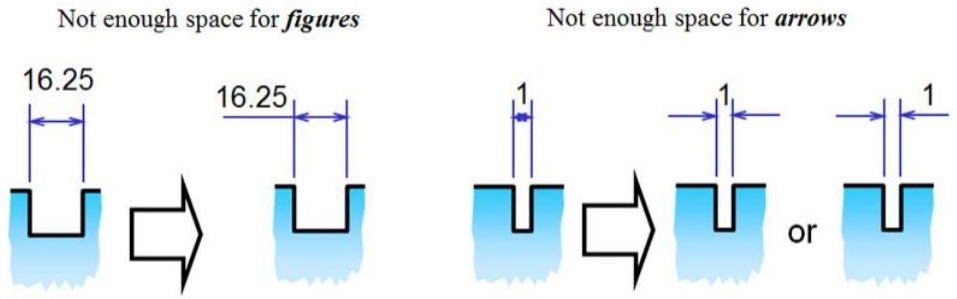

Dimensioning in Limited Space

If the space is very limited for inserting dimension lines, the portion to be dimensioned are enlarged for clear dimensioning. Sometimes smaller circular dots are used in place of arrowhead for space limitation. Fig. shows such example.

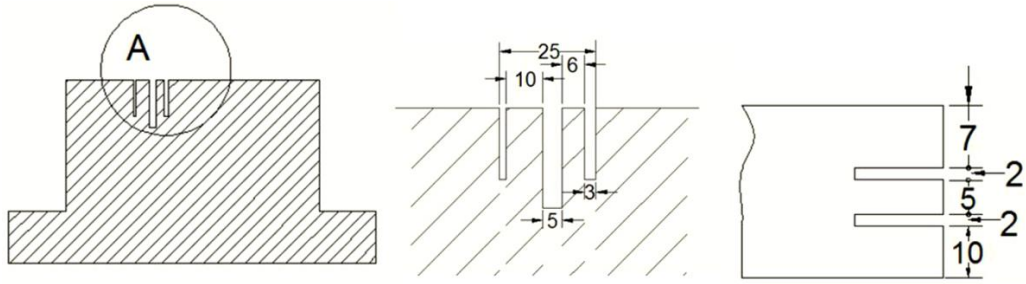

Portion to be enlarged Enlarged view of **A** Use of small dot

Dimensioning in Limited Space

2.8 Dimensioning of Angles

Angles are normally written in degrees, minutes, and seconds. The symbols used to depict degrees, minutes, and seconds are also shown in this figure. Angular measurements may also be stated in decimal form. This is particularly advantageous when they must be entered into an electronic digital calculator. The key to converting angular measurements to decimal form is in knowing that each degree contains 60 minutes, and each minute contains 60 seconds.

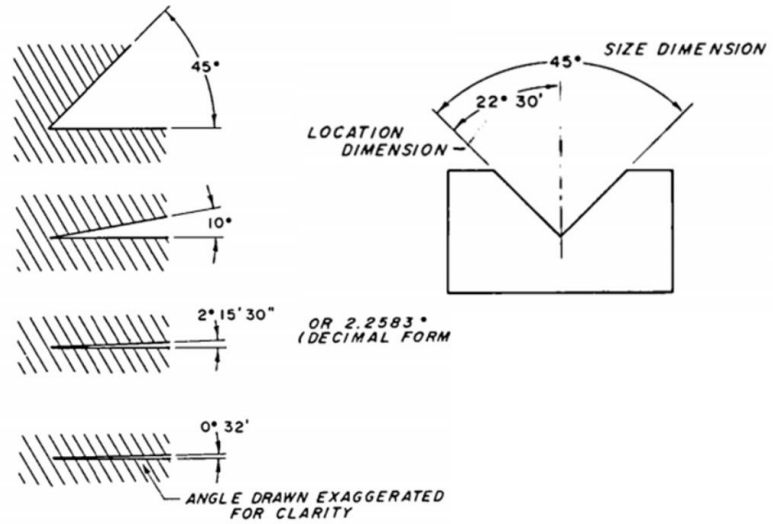

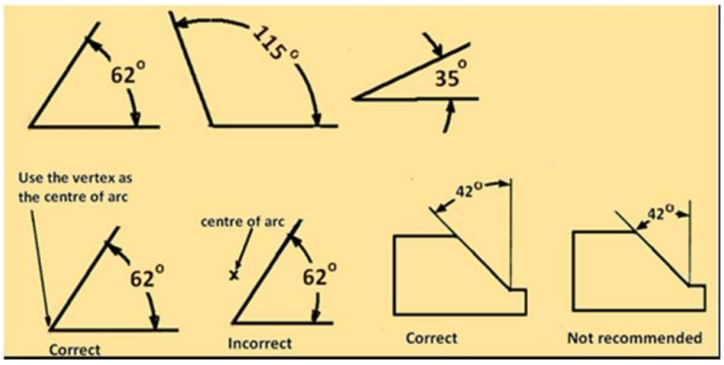

Dimensioning of Angles

2.9 Dimensioning of Arcs

The dimension figure and the arrowhead should be inside the arc, where there is sufficient space. If space is limited then leaders can be used comfortably.

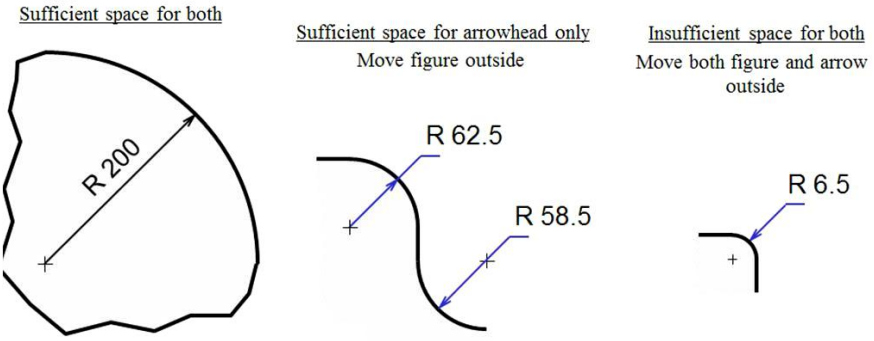

Dimensioning of Arc

2.10 Dimensioning of Chord Length, Arc Length and Angle

Chords, arcs, and angles are dimensioned in a similar manner.

The difference is:

- ✓ When dimensioning a chord length, the dimension line should be perpendicular and the extension lines parallel to the chord.
- ✓ When dimensioning an arc length, the dimension line runs concurrent with the arc curve, but the extension lines are either vertical or horizontal. An arc symbol is placed above the dimension.
- ✓ When dimensioning an angle, the extension lines extend from the sides forming the angle, and the dimension line forms an arc.

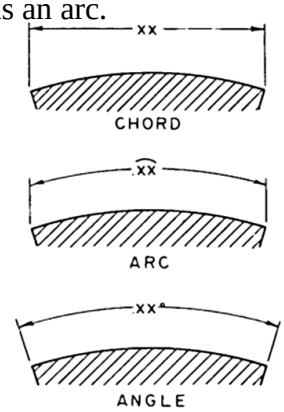

Difference among the Dimensioning Of Chord Length, Arc Length and Angle

2.11 Dimensioning of Round Holes

- ✓ Round holes are dimensioned in the view in which they appear as circles.
- ✓ Smaller holes may be dimensioned using a leader which points toward the center of the hole in which the note gives the diameter, and Larger circles are dimensioned with a dimension line drawn across the circle through its center at an angle with the diameter dimension shown.
- ✓ It is important when dimensioning holes to call off the diameter, not the radius.

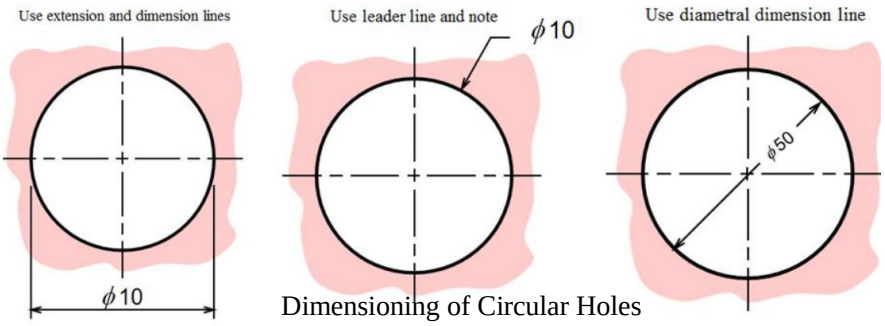

Dimensioning of Circular Holes

2.12 Dimensioning of Blind Holes

It is usual practice to use leader line and local note to specify **diameter** and **hole's depth** in the circular view.

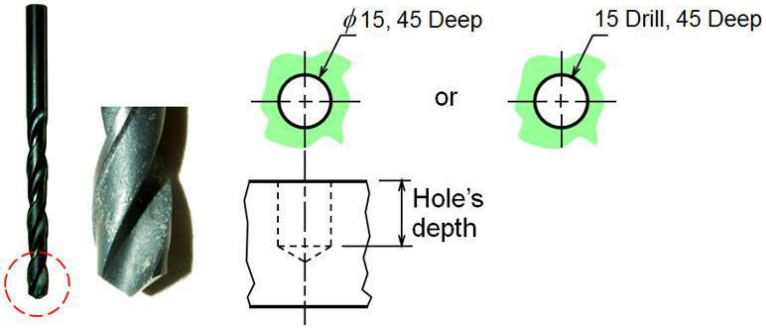

Dimensioning of Blind Holes

2.13 Dimensioning of Chamfer

It is usual practice to use leader line and note to indicate **linear distance** and **angle** of the chamfer.

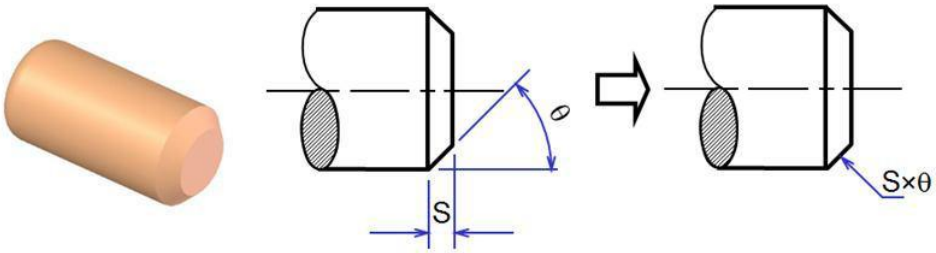

Dimensioning of a Chamfer

2.14 Arrangement of Dimensions

The arrangement of dimensions on a drawing must indicate clearly the purpose of the design of the object. They are arranged in three ways.

1. Chain dimensioning
2. Parallel dimensioning
3. Combined / Progressive dimensioning.

1. Chain dimensioning

Chain of single dimensioning should be used only where the possible accumulation of tolerances does not endanger the fundamental requirement of the component.

2. **Parallel dimensioning**

In parallel dimensioning, a number of dimension lines parallel to one another and spaced out, are used. This method is used where a number of dimensions have a common datum feature.

3. Combined dimensioning

In this dimensioning, both Chain & Parallel dimensioning methods are used simultaneously .

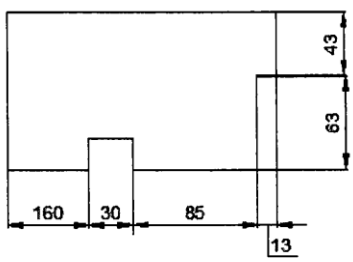

Chain Dimensioning

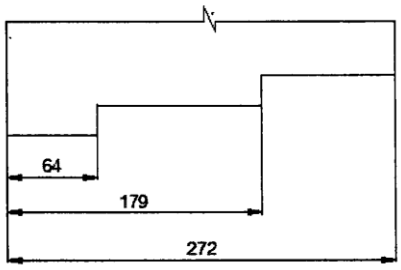

Parallel Dimensioning

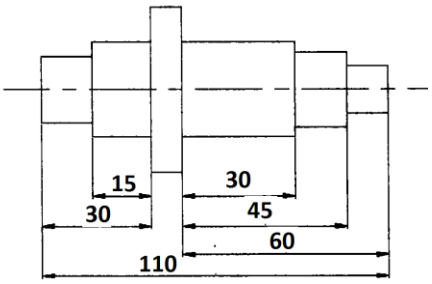

Combined Dimensioning

2.15 PRACTICAL HINTS ON DIMENSIONING

1. Dimension line should be drawn at 8mm to 10mm away from the outlines and from each other.
2. Smaller dimensions should be placed nearer to the drawing and the larger further away so that extension line do not cross the dimension line.
3. Dimensions should be placed at the centre (clearly visible).
4. All the dimension concern to one particular operation should be shown in only one view as far as possible.
5. Dimensioning from a centre line should be avoided except when the centre line passes through the centre of the hole.
6. An axis should never be used as dimension line.
7. Crossing of dimension lines should be avoided as far as possible. If however, the intersection of two dimension lines is unavoidable the lines should not broken.
8. Numerical figures and notes should legible to ensure easy reading.
9. A dimension line should not broken even where the feature to which it refers is show broken.

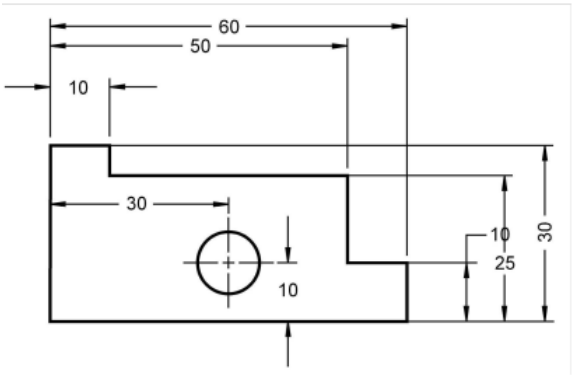

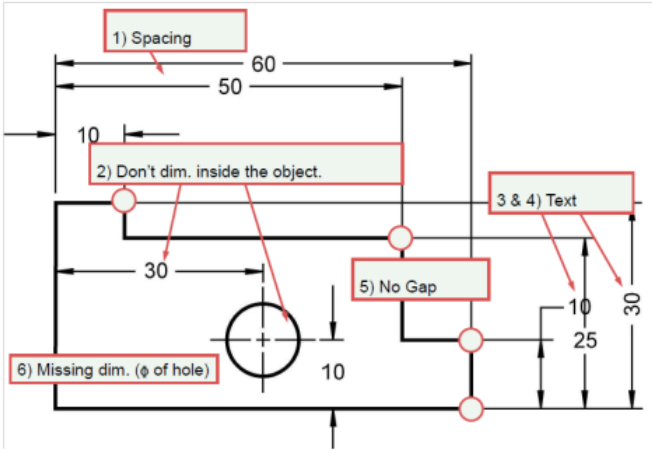

Correctly Dimensioned

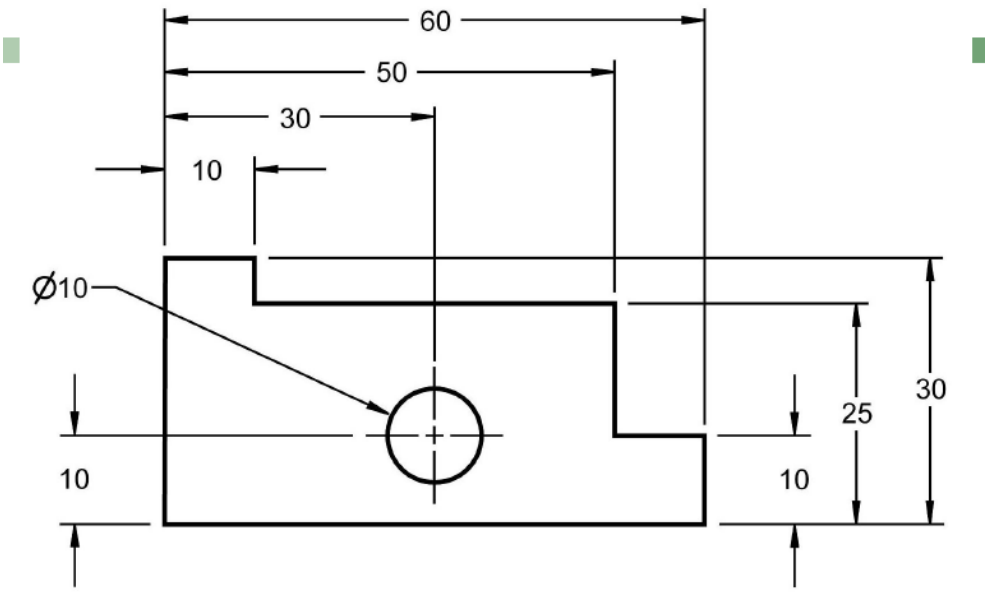

WORKED EXAMPLES

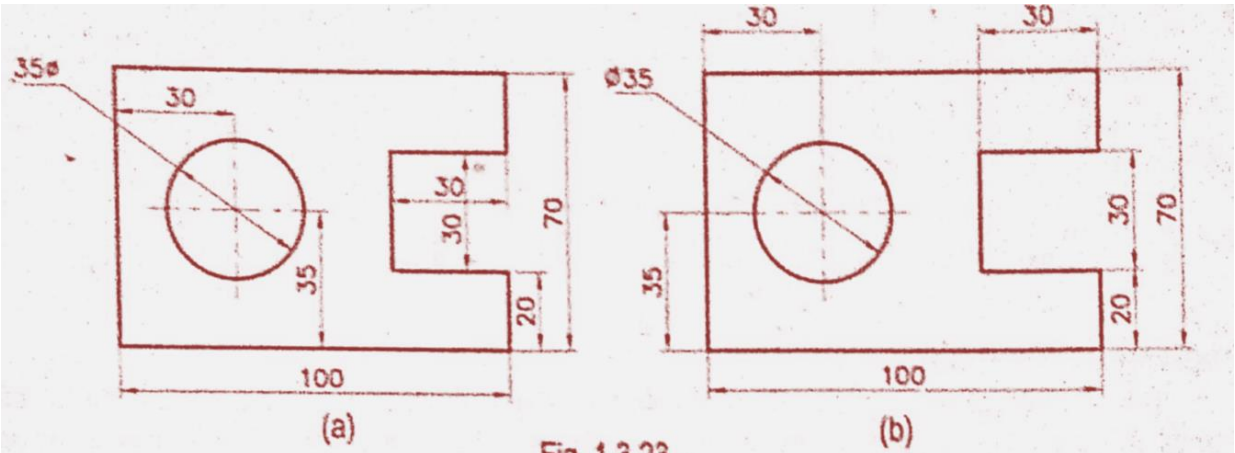

Fig. 1.3.23

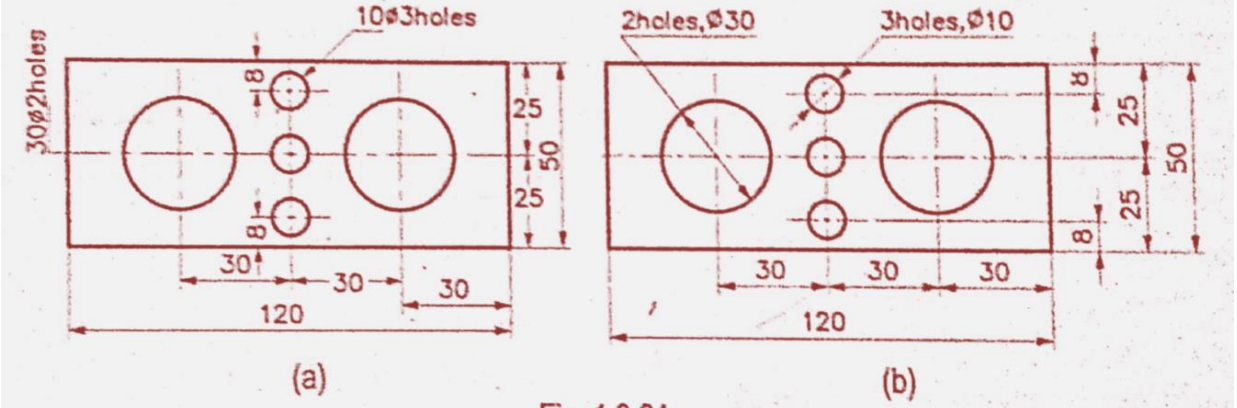

Fig. 1.3.24

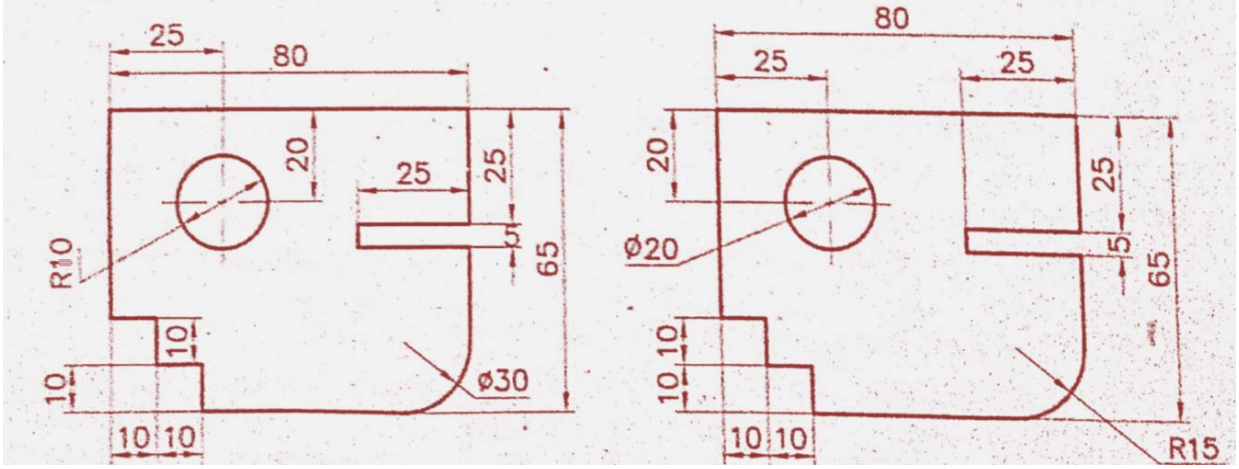

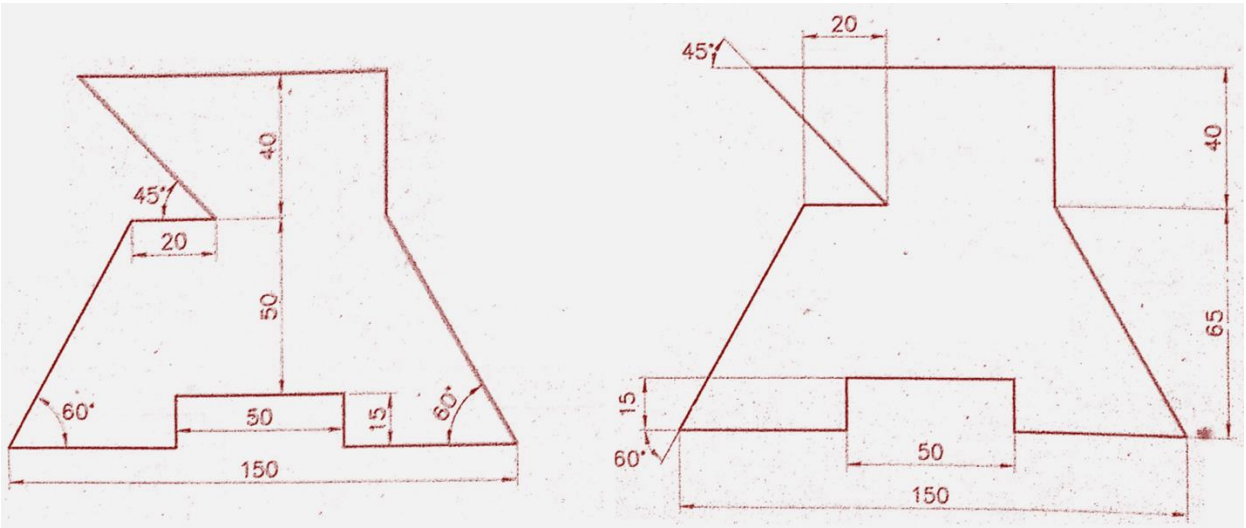

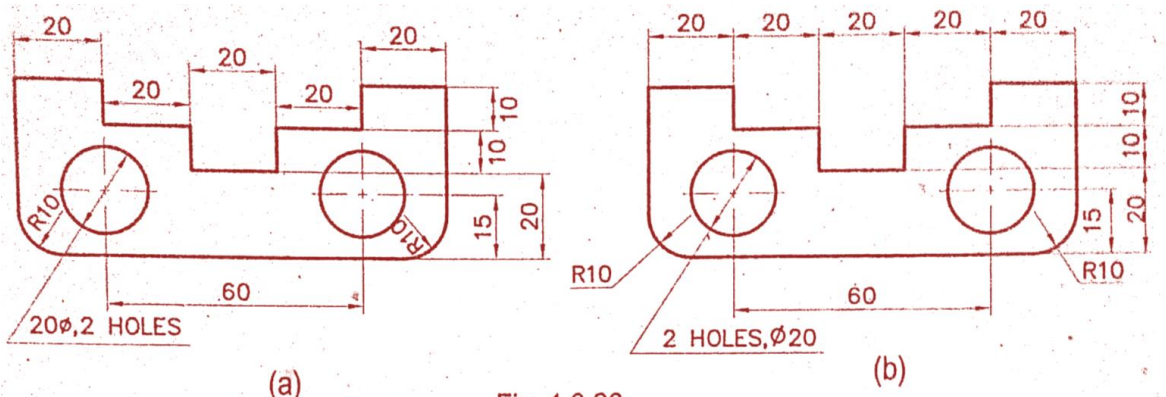

Fig. 1.3.26

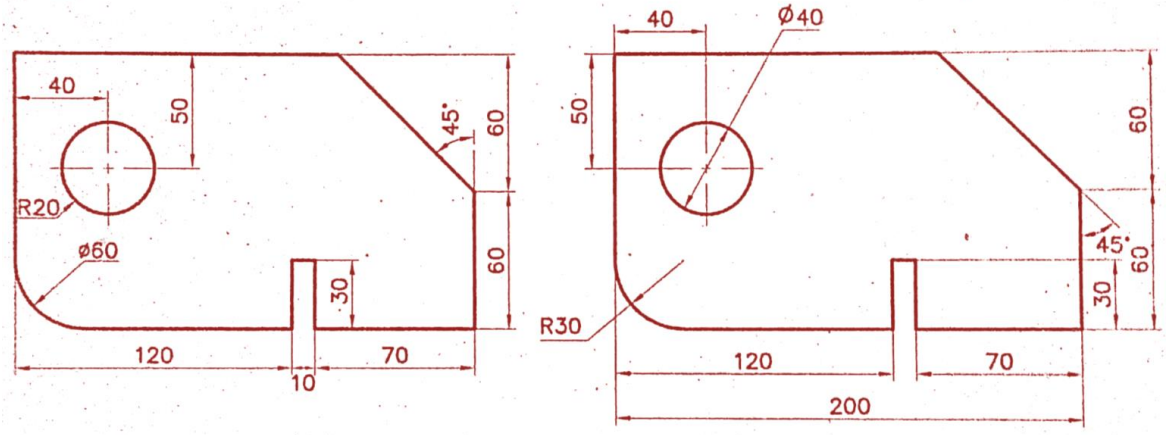

Fig. 1.3.27

EXERCISES:

PART – A (5 Marks)

Write freehand the following, using single stroke vertical (CAPITAL and lower-case) letters:

1. **Alphabets (Upper-case & Lower-case) and Numerals 0 to 9 (h = 5 and 7)**
2. **PRACTICE MAKES A PERSON PERFECT (h = 3.5 and 5)**
3. **BE A LEADER NOT A FOLLOWER (h = 5)**
4. **LETTERING SHOULD BE DONE FREEHAND WITH SPEED (h = 5)**
5. **ALL DIMENSIONS ARE IN 'mm' (h = 7)**

PART – B (15 Marks)

Read the dimensioned drawings shown in following figures. Redraw the figures and dimension them as per BIS.

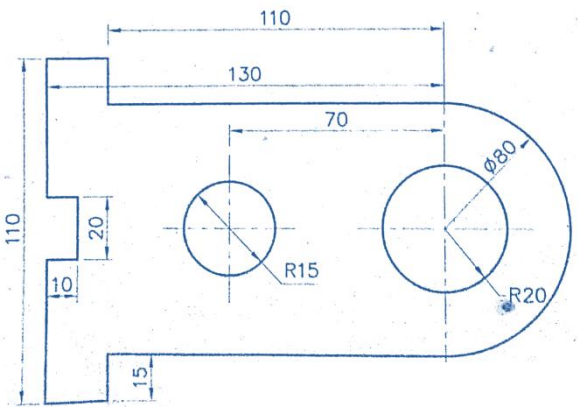

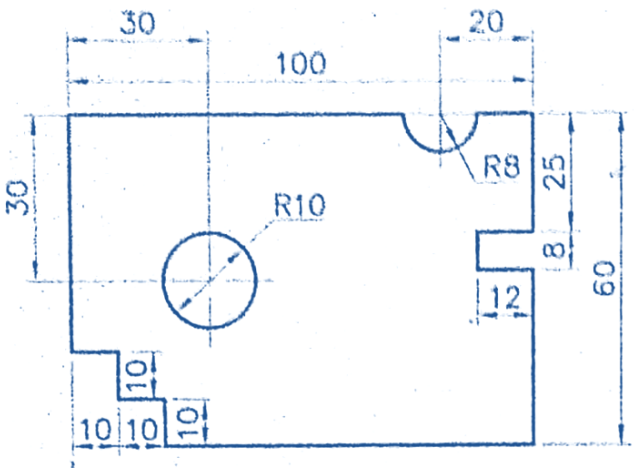
30
100
20
30
R10
R8
25
8
12
60
10
10
10
10

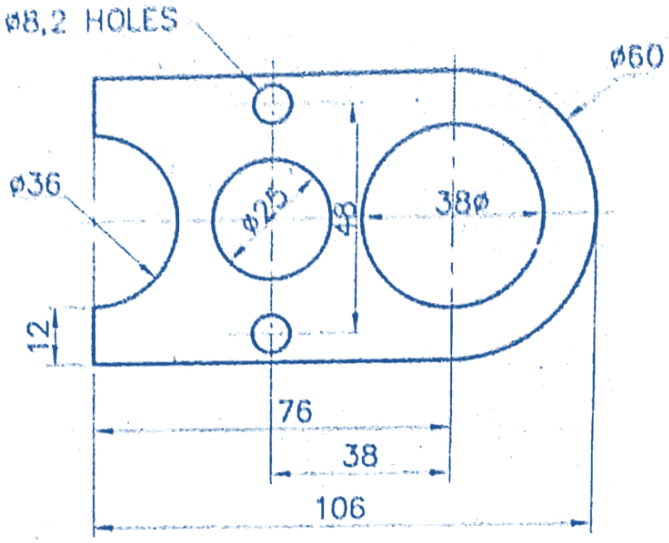
ø8,2 HOLES
ø60
ø36
ø25
48
38ø
12
76
38
106

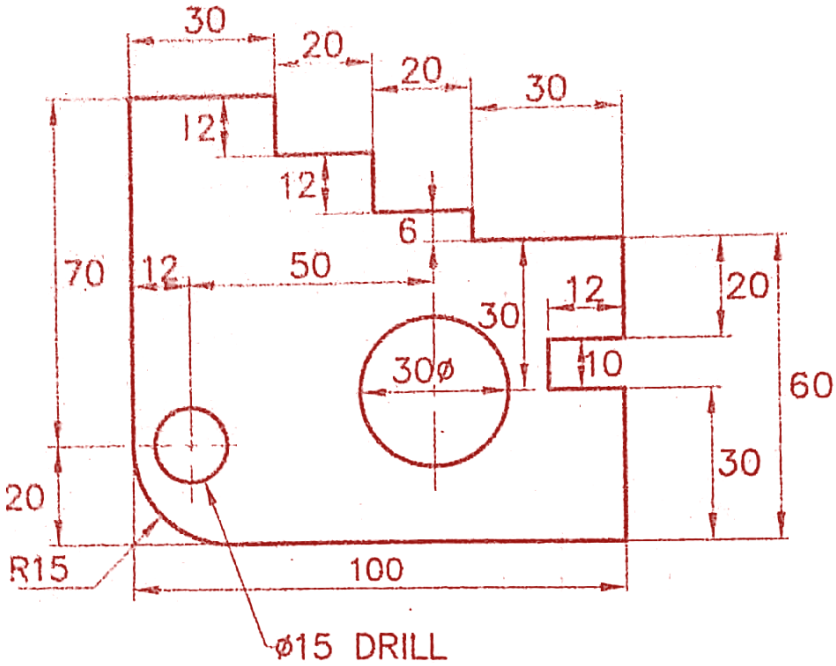
30
20
20
30
12
12
6
70
12
50
30
12
20
30ø
10
60
30
20
R15
100
ø15 DRILL

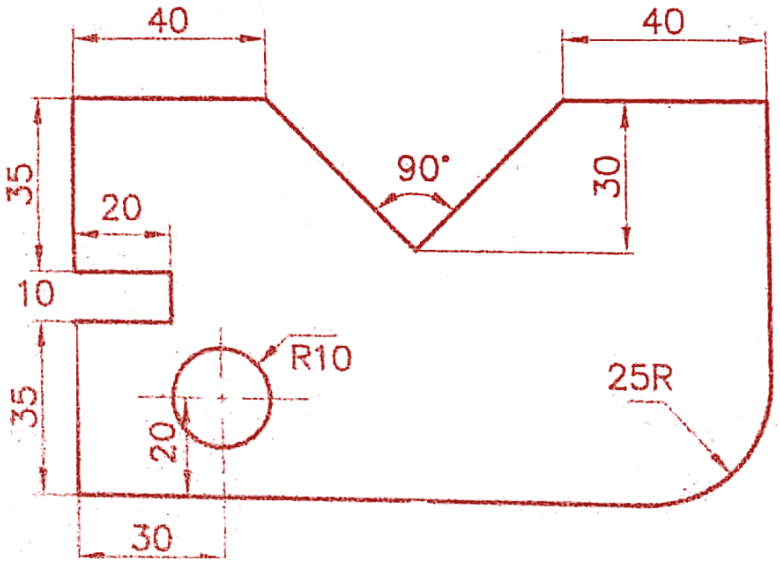
40
40
35
90°
30
20
10
R10
25R
35
20
30

UNIT II: GEOMETRIC CONSTRUCTION AND CONSTRUCTION OF CONICS

2.1 Geometric Constructions

Engineering drawing consists of a number of geometrical constructions. A few methods are illustrated here without mathematical proofs.

Bisect a given straight line (Fig 1).

- Draw a line AB of 70 mm long.
- With A and B as centres, more than half of AB as radius describe arcs on either side of the line AB.
- Let the arcs intersect at C & D.
- Join CD, bisecting the line AB at 0.
- CD is the bisector of the line AB and AO = OB.

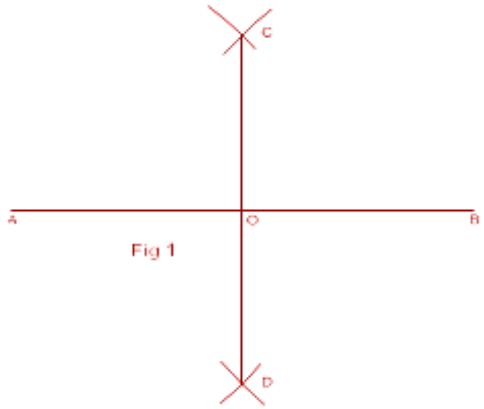

Fig 1

To bisect a given angle

- With O as centre and take any convenient radius, mark arcs cutting OA and OB at C and D respectively.
- With C and D as centres and same or any other convenient radius, mark two arcs intersecting each other at E.
- Join OE. OE is the bisector of ∠AOB. This is shown in Fig.2.3

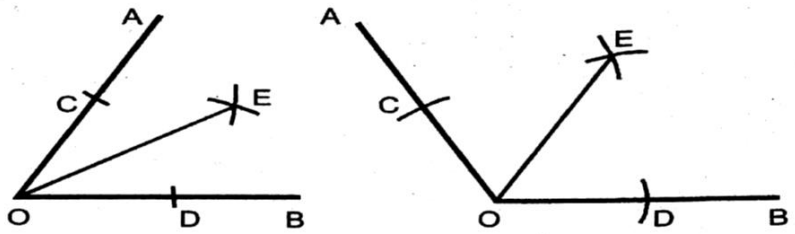

Fig.2.3

To divide a given line into any number of equal parts

Suppose the line AB is to be divided into 6 equal parts.

- Draw a line AC of any length inclined to AB at some convenient angle.
- Mark off six equal divisions on AC by cutting arcs of suitable radii consecutively starting from A. Name these divisions as 1, 2, 3, 4, 5 and 6.
- Join 6 with B.
- Draw lines through 5, 4, 3, 2 and 1 parallel to 6-B and cutting AB at points 5', 4', 3', 2'and 1' respectively. Set-squares or drafter may be used for this purpose. The divisions 1', 2', 3', 4', 5' divide the line AB into 6 equal parts.

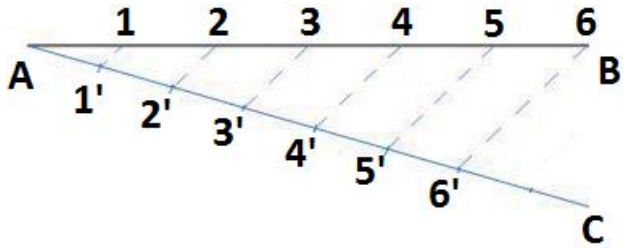

To divide a given Circle into any number of equal parts

- For example divide a circle into 12 equal parts, from centre point 'O' make 30° angle to divide 12 equal parts by angle method. **(360°/ 12 = 30°)**
- Otherwise, draw 4 radial lines (perpendicular to each other) through centre point 'O', radial line touching point as centre, cut circle with same circle radius. Note the points and join all points through centre point 'O'.

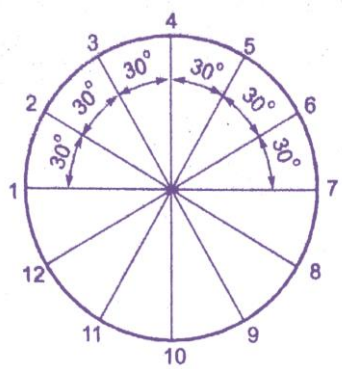

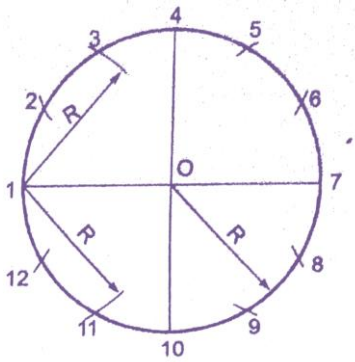

To draw an Arc touching two lines at any angle

- Draw AB & BC lines at perpendicular to each other.
- Take any Radius R, B as centre and cut AB and BC lines, note the points as D and E.
- With the same radius R, D & E as centre make cutting point "O"
- From "O" as centre make an arc which is touching the two lines AB and BC.

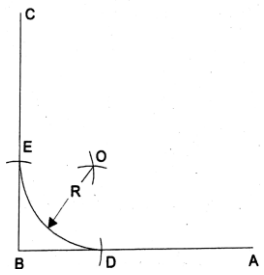

To an Arc of a Given Radius touching to Other two Circular Arcs

draw an arc with a radius equal to AB, tangent to the circular arcs CD and EF. Set a compass to a spread equal to the radius of arc CD plus AB (indicated by the left-hand dashed line), and, with O as a center, strike an arc. Set the compass to a spread equal to the radius of arc EF plus AB (indicated by the right-hand dashed line), and, with O′ as a center, strike an intersecting arc. The point of intersection between the two arcs (P) is the center of the circle of which an arc of given radius is tangent to arcs CD and EF.

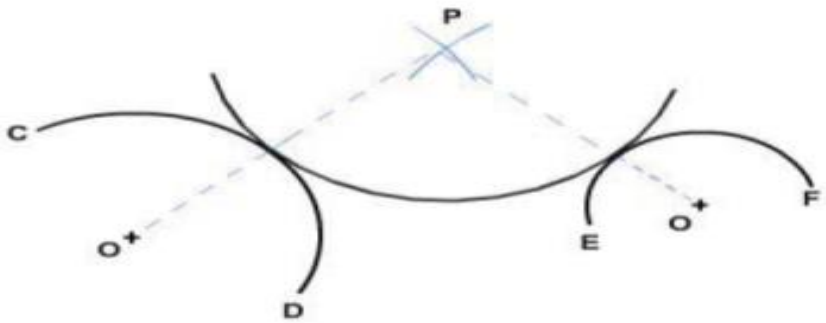

Construction by inscribe and circumscribe a circle

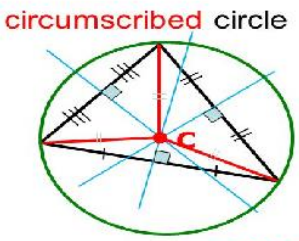

- bisect each side at a right angle
- meet at a point called the circumcenter
- The circumcenter is equidistant from the 3 vertices of the triangle.
- The circumcenter is the center of the circle that is circumscribed about the triangle.
- The circumcenter could be located inside, outside, or ON the triangle.

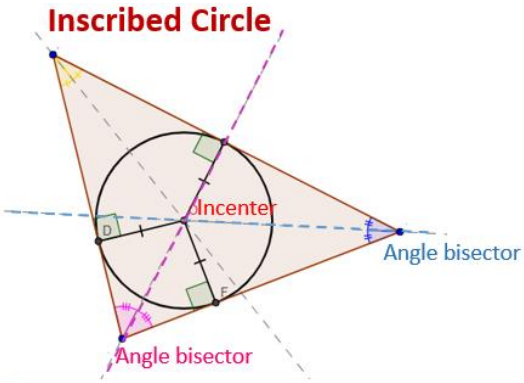

1. Bisect two angles of the triangle.
2. The angle bisectors will intersect at the incenter.
3. Using the incenter as the center, draw a circle that will touch the triangle.

CONSTRUCTION OF CONICS

Introduction

The conic sections (or conics) - the ellipse, the parabola and the hyperbola - play an important role both in mathematics and in the application of mathematics to engineering. The main objective of this chapter is, therefore, to deal with the construction of various types of plane curves such as ellipse, parabola and hyperbola, etc which are otherwise known as conic sections. These curves are very often used in engineering practices. Many engineering structures such as arches, bridges, dams, monuments, cooling towers, water channels, chimneys, roofs of stadiums, etc. involve geometries of conic sections. It is therefore very much necessary to study the nature of these curves together with some of their geometric properties and explain some of the convenient methods for construction of these curves.

Conic Sections

- An *ellipse* is obtained when a section plane *A–A*, inclined to the axis cuts all the generators of the cone.
- A *parabola* is obtained when a section plane *B–B*, parallel to one of the generators cuts the cone. Obviously, the section plane will cut the base of the cone.
- A *hyperbola* is obtained when a section plane *C–C*, inclined to the axis cuts the cone on one side of the axis.
- A *rectangular hyperbola* is obtained when a section plane *D–D*, parallel to the axis cuts the cone.

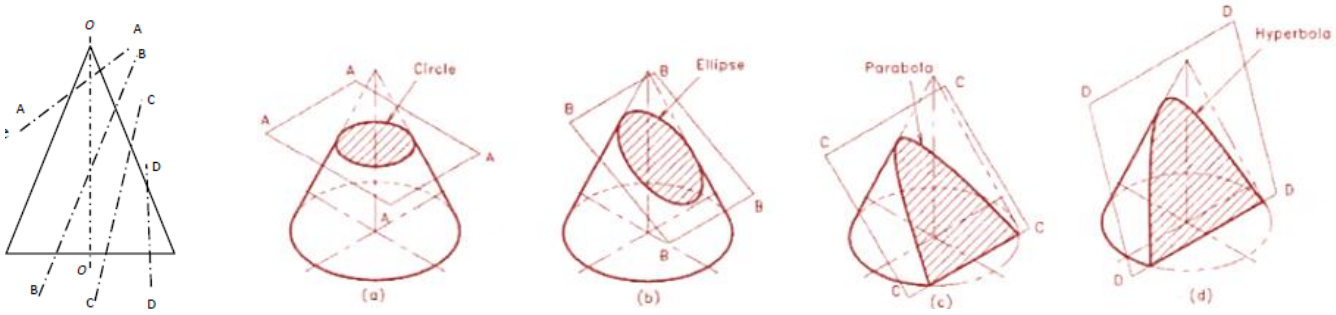

1. Ellipse

- The section plane obtained by the intersection of a cutting plane, inclined to the axis of the cone and cutting all the generators, is called an ellipse. The angle of inclination of the cutting plane with the axis of the cone is more than that of the generator with the axis. An ellipse is a closed curve.
- An imaginary line joining the apex to the centre of the base of the cone is known as the axis of the cone.
- The top point of the cone is called the apex.

2. Parabola

- The section plane obtained by the intersection of a cutting plane, inclined to the axis of the cone and parallel to one of the generators, is called a parabola.

3. Hyperbola

- The section plane obtained by the intersection of a cutting plane, inclined to the axis of the cone at an angle less than the inclination of the generator with the axis (semi-vertical angle, is called a hyperbola. In this case the cutting plane cuts the cone on one side of the axis.

4. Circle

- The section plane obtained by the intersection of a cutting plane, parallel to the base of the cone, is called a circle.
- Circle is a special is the special case of the ellipse and is sometimes referred to as fourth type of conic section.

Locus

The path traced out by a point when it moves in the space, under given conditions or in accordance with a definite law, is known as a locus of that point (loci in the plural).

Geometrical definition of conic/ conic section as a plane of *loci*

A conic section or conic is defined as the locus of a point moving in a plane in such a way that the ratio of its distances from a fixed point and a fixed straight line is always constant. **The fixed point is called the *focus* and the fixed line is called the *directrix*.**

The ratio *distance of the point from the directrix disance of the point from the focus* is called eccentricity and is denoted by *e*.

- For **ellipse**, this eccentricity is **always less than 1 (e < 1)**.
- It is **equal to 1 (e = 1) for parabola** and
- **Greater than 1 (e > 1) for hyperbola**.

The line passing through the focus and perpendicular to the directrix is called the axis. The point at which the conic cuts its axis is called the *vertex*.

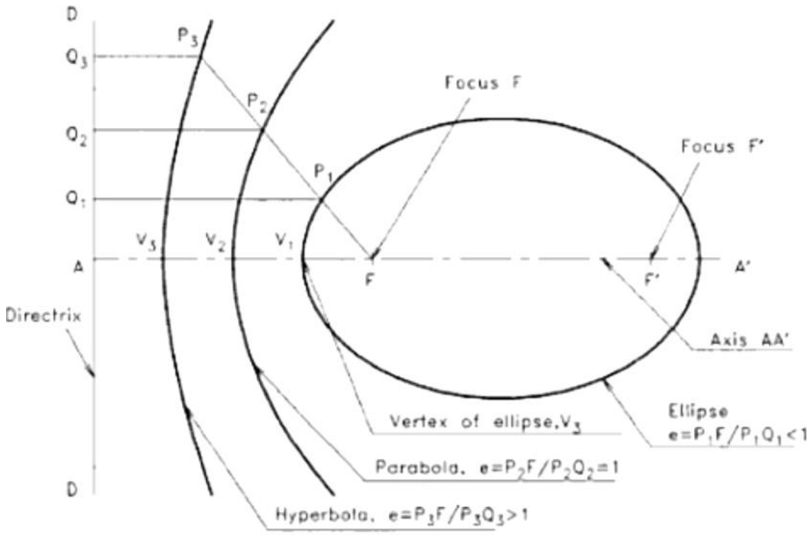

ELLIPSE:

- Eccentricity is less than 1.
- Closed curve.
- The fixed points represent the foci.
- Ellipses are mostly found as harmonic oscillators, phase visualization, elliptical gears, and ellipse wings.

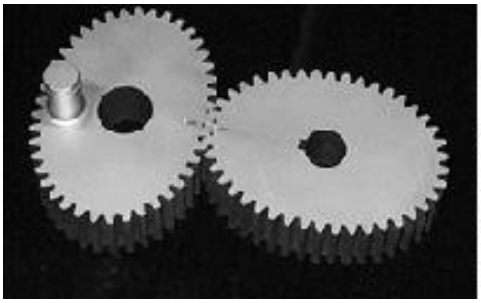

Methods of construction of ellipse

There are a number of methods available for construction of ellipse. The type of method to be used for construction of ellipse depends on the specific parameters of an ellipse. Some of the methods are mentioned as follows.

1. Eccentricity method
2. Concentric circle method
3. Oblong method/Rectangle method

Steps for Focus-Directrix or Eccentricity Method

Construct an ellipse given the distance of the focus from the directrix as 50mm and eccentricity 2/3 . Draw a tangent and a normal to the curve at a point on it 15 mm above the major axis.

Construction

1. Draw any vertical line AB as its directrix.
2. Take any point C on it and draw the axis which is perpendicular to AB.
3. On the axis, mark the focus F_1, such that CF_1 = 50 mm,
4. Divide CF_1 into (2+3 = 5) 5 equal parts.
5. Locate the vertex V on the third division from C. Now $\frac{VF_1}{VC} = \frac{2}{3}$
6. Draw a perpendicular line VE, such that VE = VF_1.
7. Join C and E. In the triangle CVE, $\frac{VE}{CV} = \frac{VF_1}{CV} = \frac{2}{3}$
8. Mark arbitrary points 1, 2, 3, 4, etc on the axis and draw perpendicular lines through the points (on both sides of the axis) to meet CE produced at 1',2',3',4', etc.
9. With F_1 as centre and 1-1' as radius, draw arcs to intersect the perpendicular through 1 at P_1 and P_1'.
10. Repeat the same procedure to obtain the points P_2, P_3, P_4 .....etc and P_2', P_3', P_4' .... etc.
11. Draw a smooth curve through these points and V to get the required ellipse. It is a closed curve having two focus and two directrices.

Tangent and Normal

1. Mark a point M on the ellipse which 15mm above the axis.
2. Join M with the foci F_1 and F_2.
3. Draw a line NM bisecting $\angle F_1MF_2$. Then NM is the required normal to the ellipse at M.
4. Draw a line TT through M and perpendicular to NM. The line TT is the required tangent to the ellipse at M.

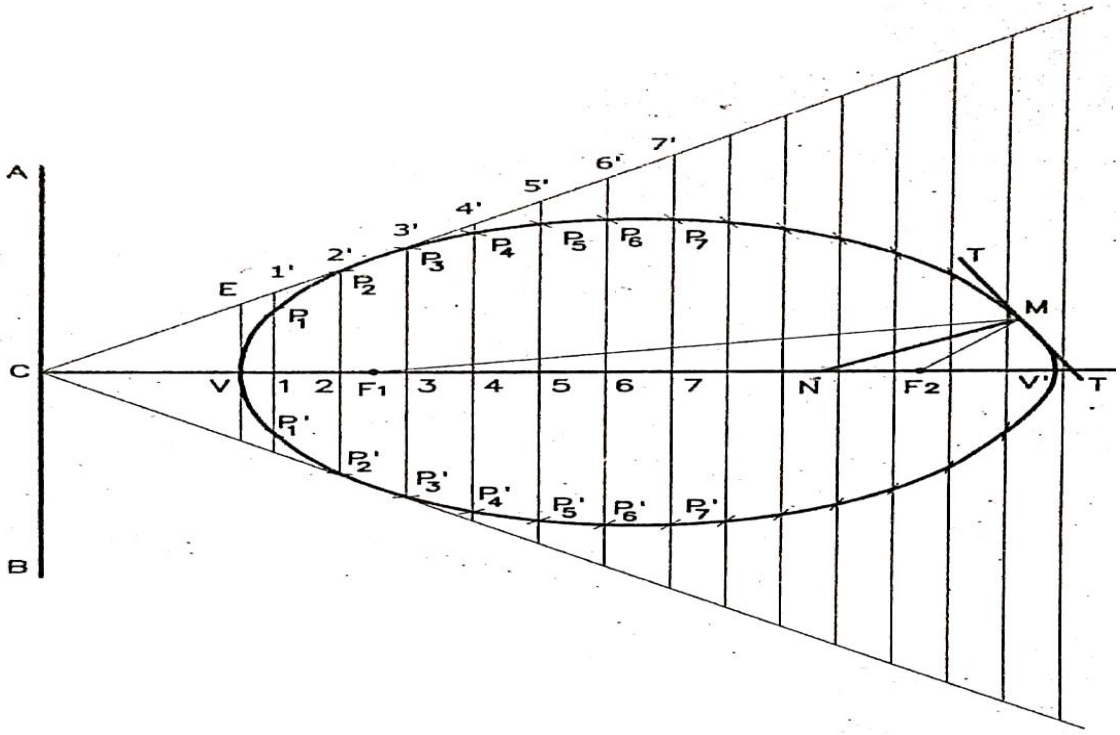

Concentric Circle Method

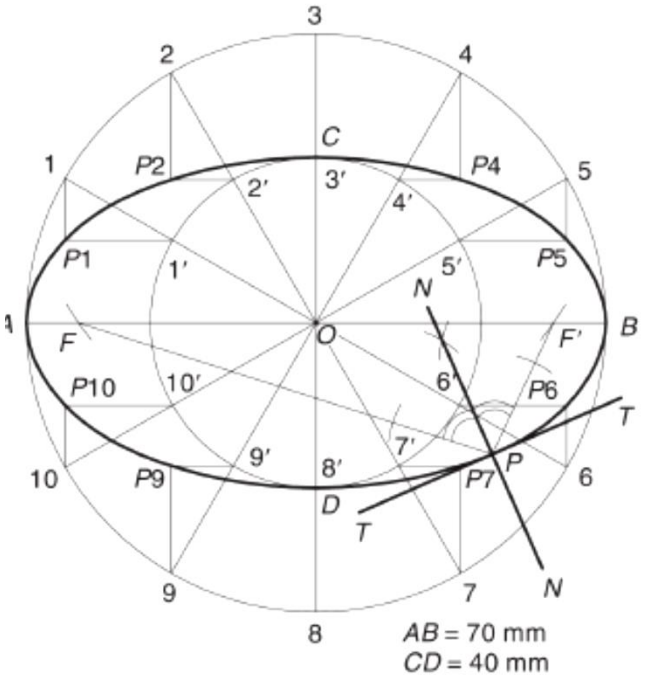

Draw an ellipse having the major axis of 70 mm and the minor axis of 40 mm.

Draw the major axis AB = 70 mm and minor axis CD = 40 mm, bisecting each other at right angles at O.

Draw two circles with AB and CD as diameters. Divide both the circles into 12 equal parts and number the divisions as A, 1, 2, 3, … 10, B and C, 1', 2', 3' … 10', D.

Through 1, draw a line parallel to CD. Through 1', draw a line parallel to AB. Mark P1 at their intersection.

Obtain P/2, P4, P5, etc., in a similar way.

Draw a smooth closed curve through A– P1–P/2– C– P4– P5– B– P6– P7– D– P/9– P10– A.

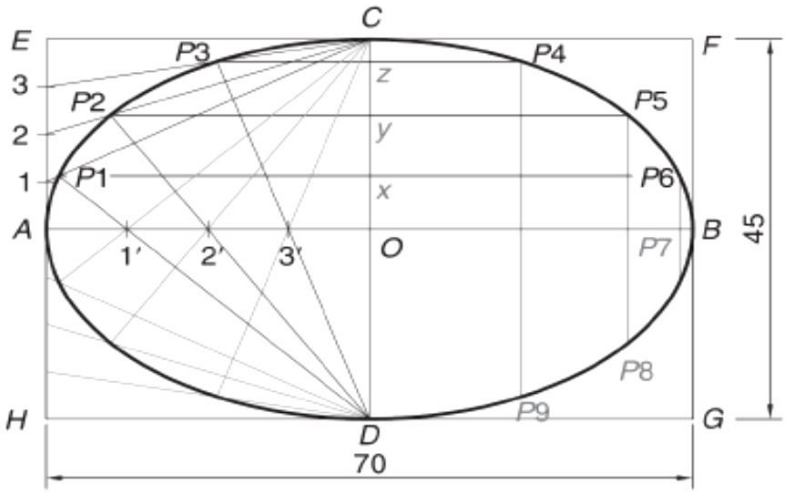

Steps for Oblong Method

Draw an ellipse with a 70 mm long major axis and a 45 mm long minor axis.

or

Draw an ellipse circumscribing a rectangle having sides 70 mm and 45 mm.

1. Draw the major axis AB = 70 mm and minor axis CD = 45 mm, bisecting each other at right angles at O.
2. Draw a rectangle EFGH such that EF = AB and FG = CD.
3. Divide AO and AE into same number of equal parts, say 4. Number the divisions as 1, 2, 3 and 1', 2', 3', starting from A.
4. Join C with 1, 2 and 3.
5. Join D with 1' and extend it to meet C–1 at P1. Similarly, join D with 2' and 3' and extend them to meet C–2 and C–3 respectively to locate P/2 and P/3.

Parabola

- A parabola is a conic whose eccentricity (e) is equal to 1.
- It is an open end curve with a focus, a directrix and an axis.
- In physical world, parabola are found in the main cables on simple suspension bridge, as parabolic reflectors in satellite dish antennas, vertical curves in roads, trajectory of a body, automobile head light, parabolic receivers.

Methods of construction of parabola

There are a number of methods available for construction of parabola. The type of method to be used for construction of parabola depends on the specific parameters of a parabola. Some of the methods are mentioned as follows.

1. Eccentricity method 2. Rectangle method 3. Parallelogram method

Parabola by Eccentricity method

Construct a Parabola whose focus is 50mm away from the directrix, also draw a tangent and normal at any point.

Construction

1. Draw a vertical line AB as directrix and a line CD perpendicular to AB as the axis.
2. Mark focus F on CD such that CF = 50 mm. Since the eccentricity for parabola is 1, the vertex V is located at the mid point of CF.
3. Select any numbers of points 1, 2,3,4 etc on the axis beyond the vertex. Through these points draw perpendicular lines to CD on both sides of axis.
4. With F as centre and C-1 as radius draw arcs cutting the perpendicular lines at P_1 and P_1'.
5. Similarly, locate the points P_2 and P_2', P_3 and P_3' etc.
6. Join these points through vertex V by a smooth curve to get the required parabola.

Tangent and normal

1. Make any point P on the curve
2. Draw a line joining P and F. From F draw a line perpendicular to PF to meet the directrix at T
3. Draw a line through P and T. This line TT is the required tangent to the parabola at P.
4. From P, draw a line NN perpendicular to TT. This line NN is the required normal to the parabola.

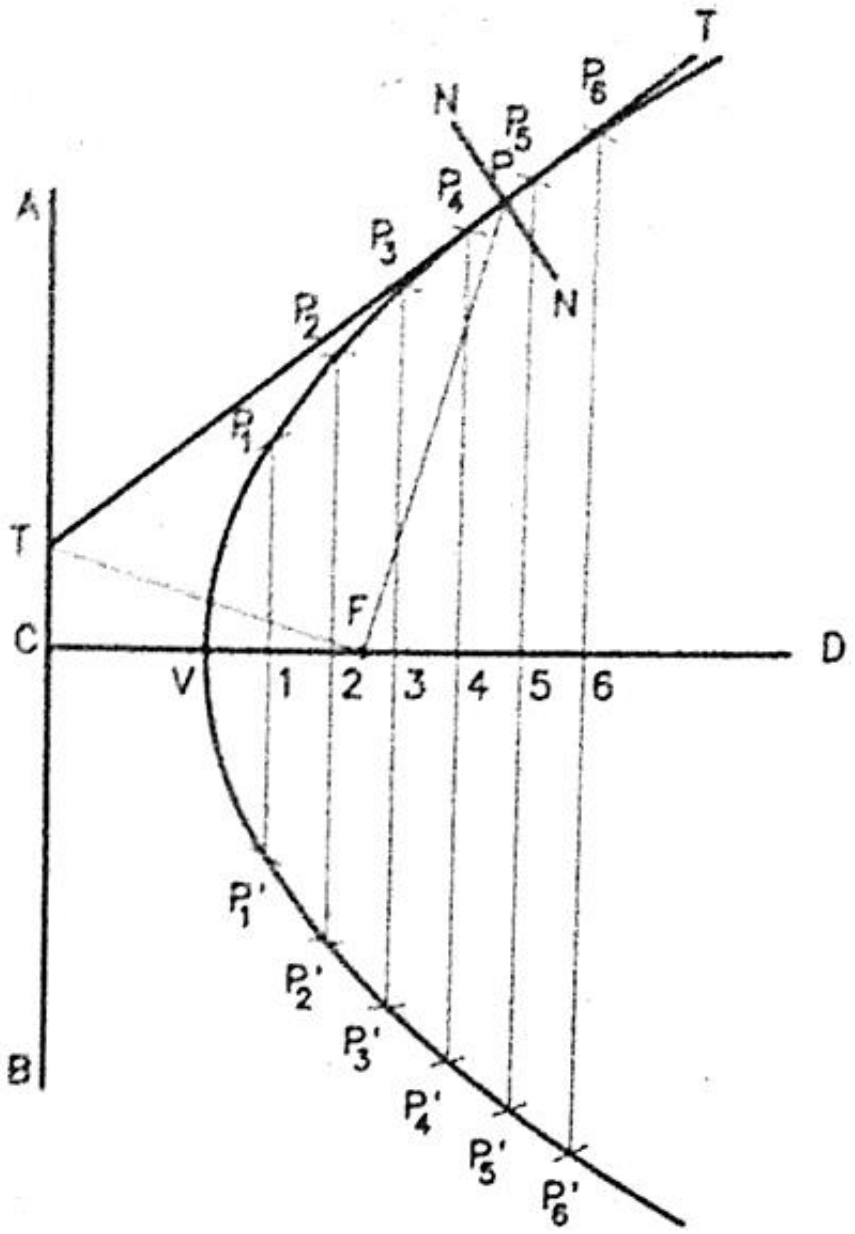

Parabola by Rectangle Method

Construct a parabola enclosed by a rectangle of size 120 x 100mm. Use rectangle method .

Construction

1. Draw the base of the rectangle AB = 120mm. Mark its mid point E.
2. Draw the axis EF = 100mm, perpendicular to AB.
3. Complete the rectangle ABCD, making side BC equal to EF.
4. Divide AD and AE into the same number of parts (say 4). Name the divisions from A as 1,2,3 and 1', 2', 3'.
5. Draw lines joining F with the points 1, 2 and 3.
6. Through 1', 2' and 3' draw perpendiculars to AE.
7. Let them intersect F-1, F-2 and F-3 at P_1, P_2 and P_3 respectively.
8. Draw a smooth curve through A, P_1, P_2, P_3 and F to get half of the parabola.
9. Repeat the same procedure in the other side, to get the remaining portion of the parabola.

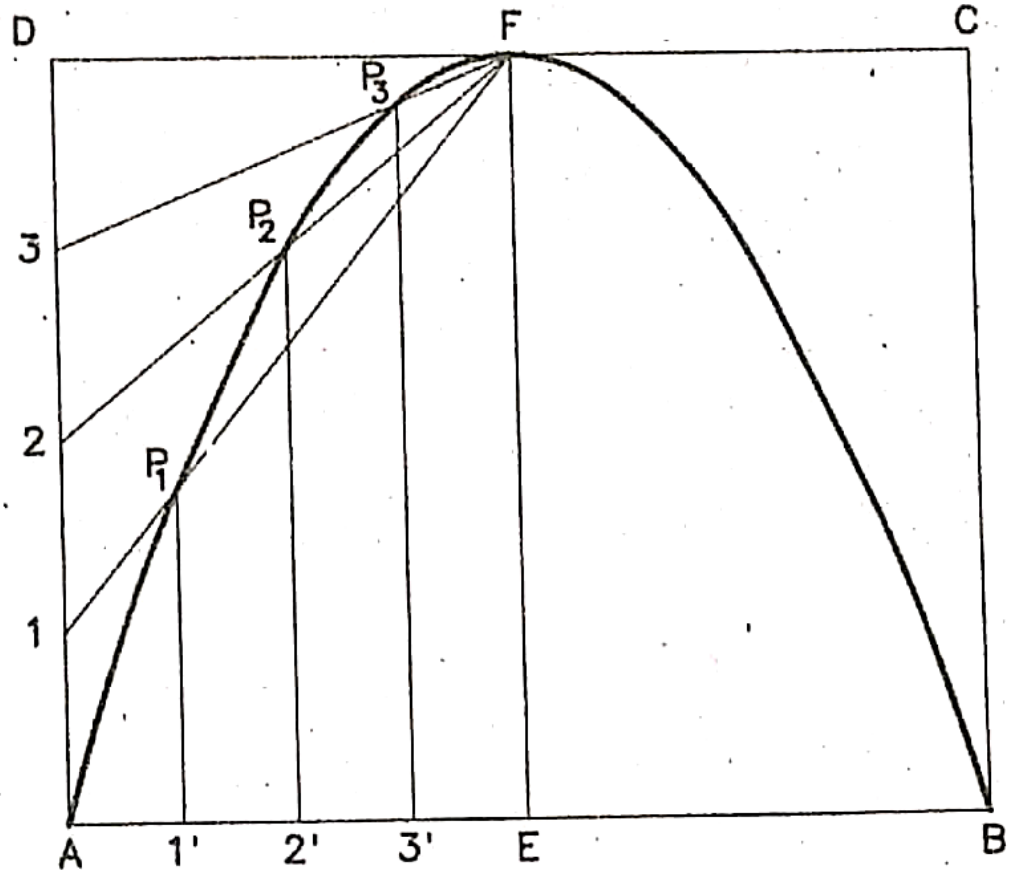

Parabola by Parallelogram Method

Construct a Parabola in a parallelogram of size 120 x 100 mm. The acute angle included by the size is 70°

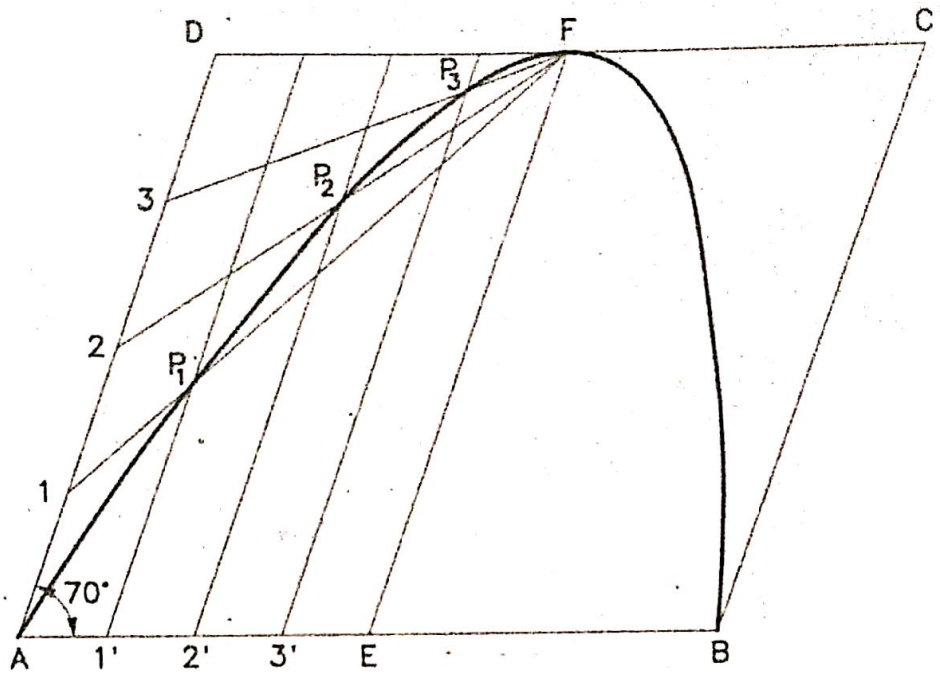

Construction

1. Draw a parallelogram ABCD of sides 120 x 100 mm with included angle by the sides 70 °
2. Mark E and F as the midpoint of AB and DC.
3. Joining a line E and F. EF is the axis of the parabola. Repeat the same procedure as done in the rectangle method of parabola

Parabola

- A parabola is a conic whose eccentricity (e) is greater than 1.
- It is an open end curve.
- Lampshades, gear transmission, cooling towers of nuclear reactors are some of the applications of Hyperbola.

Eccentricity Method

To draw a hyperbola with the distance of the focus from the directrix at 50mm and e=3/2 (Eccentricity method)

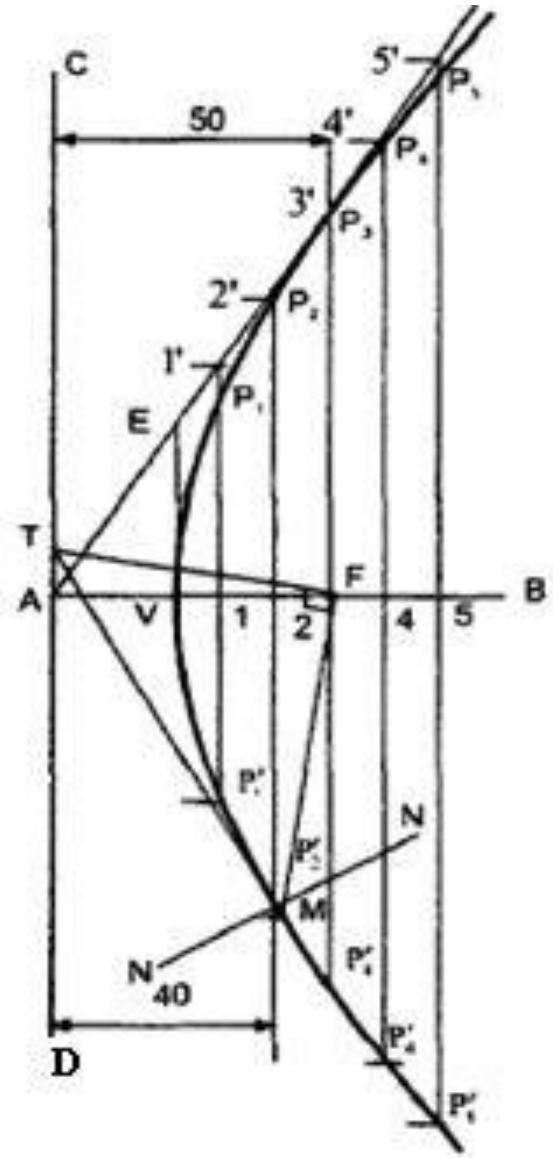

Construction:

1. Draw the directrix CD and the axis AB.
2. Mark the focus F on AB and 65mm from A.
3. Divide AF into 5 equal divisions and mark V the vertex, on the second division from A.
4. Draw a line VE perpendicular to AB such that VE=VF. Join A and E.
5. Mark any point 1 on the axis and through it, draw a perpendicular to meet AE produced at 1'.
6. With centre F and radius equal to 1-1', draw arcs intersecting the perpendicular through 1 at P1 and P'1.
7. Similarly mark a number of points 2, 3 etc and obtain points P2 and P'2, etc.

Exercises

Part – A (5 marks)

1. Divide a straight line AB of 74mm into 12 equal divisions.
2. Bisect an arc of 30 mm radius.
3. Bisect the angles of 45° and 130°.
4. DIvide the circle of 30mm diameter into 8 equal divisions.
5. Divide the circle of radius 20mm into 12 equal parts.
6. Draw an arc of 20mm radius touching the two striaght lines which makes an angle of 45°.
7. Draw an arc of 10mm radius touching the two striaght lines which makes an angle of 45°.
8. Draw an arc of 30mm radius touching the two arcs of 30mm and 70mm radius at an offset centre distance of 60mm. Both centres on opposite side.

Part – B (15 marks)

ELLIPSE

1. Construct an ellipse given the following; The distance of the focus from the directrix is 65mm and eccentricity is 3/2. Draw tangent and normal at any point on the curve.
2. Draw an ellipse having a major axis of 120mm and minor axis of 70mm using concentric circles method. Draw a tangent and normal at any point on the ellipse.
3. The foci of an ellipse are 100mm apart. The minor axis is 70mm. Determine the major axis and draw ellipse using rectangle method. Draw a tangent and normal at any point on the ellipse. (Oct'94).
4. Inscribe an ellipse in a parallelogram of sides 150mm and 90mm. The acute angle between the sides is 50°.

PARABOLA

1. Draw a parabola whose focus is 60mm from the directrix. Draw a tangent and a normal at any point on it.
2. Construct a parabola enclosed by a rectangle of size 150 mm x 100mm . Use rectangle method.
3. Construct a parabola enclosed by a parallelogram of size 160 mm x 120mm. The angle included with the sides is 80 °

HYPERBOLA

1. Construct a hyperbola whose vertex is 75mm from its focus and excentricity is 3/2 .

UNIT III – CONSTRUCTION OF POLYGONS AND SPECIAL CURVES

3.1 constructions of polygons

A polygon is a closed plane figure with three or more straight sides. The most important of these polygons as they relate to drafting are probably the triangle with three sides, square with four sides, the hexagon with six sides, and the octagon with eight sides. A polygon is said to be "Regular Polygon" when all of its sides are equal in length and each of the internal angles formed at corners are equal in magnitude. Some helpful relations to be remembered for regular polygons are:

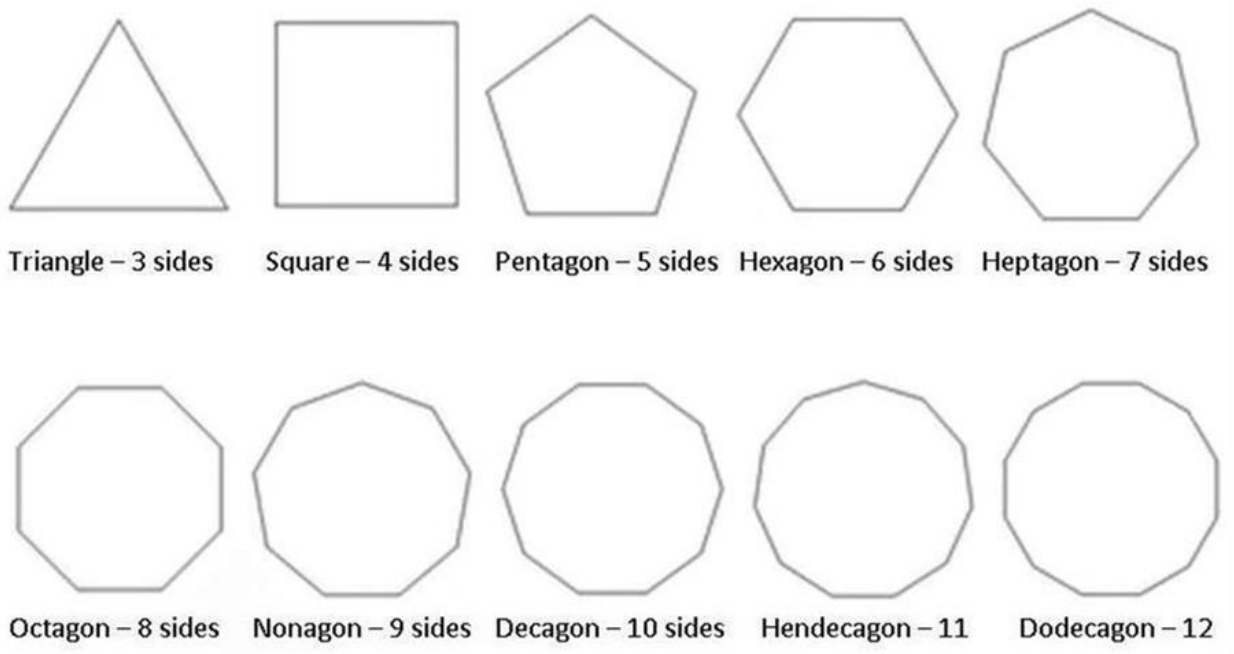

Triangle

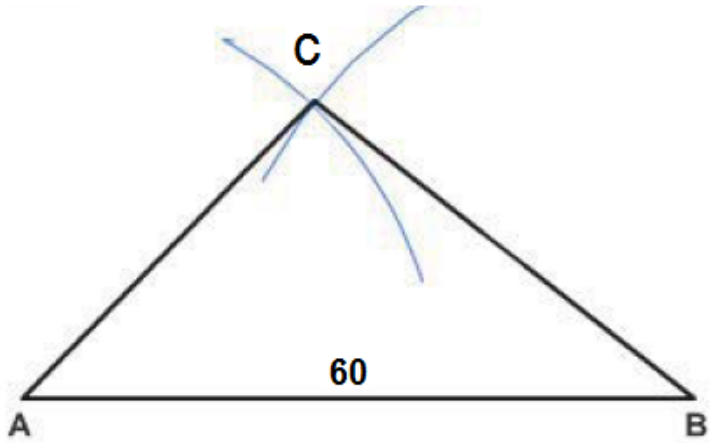

To draw a triangle with three sides given, first draw a straight line AB **=60** With A as a center, strike an arc with a radius equal to the given length of the second side. (AC = 45)

With B as a center, strike an intersecting arc with a radius equal to the length of the third side. Draw lines from A and B to the point of intersection of the arcs.

construct a square with a given length of side by the method described for constructing a rectangle. Another method is shown in *Figure 5-18*. With a T square, draw horizontal line AB equal to the given length of side. With a T square and a 45° triangle, draw diagonals from A and B at 45° to AB. Erect perpendiculars from A and B, intersecting the diagonals, then connect the points of intersection.

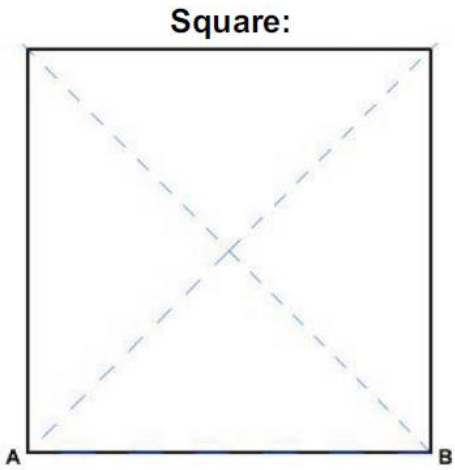

How to Draw A Pentagon (5 Sides)

Given: The locations of the pentagon center and the diameter of circle that will circumscribe the pentagon.

- ✓ **Step 1**: Draw the circle with given diameter taking given location as center (C). Letter a diameter as HB.
- ✓ **Step 2**: Draw a perpendicular CD that meets the circumference at D.
- ✓ **Step 3:** Bisect radius CB at A.
- ✓ **Step 4:** With A as center, and CD as radius, strike arc DE that meets the radius CH at E.
- ✓ **Step 5:** With D as center, and DE as radius, strike arc EF that meets the nearest circumference at F.
- ✓ **Step 6:** Draw line DF, this is the length of one side. Now set off distances DE around the circumference of the circle, and draw the sides through these points.

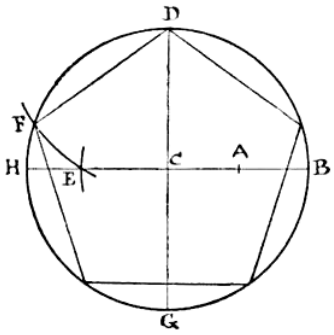

How to Draw a Hexagon (6 Sides)

Given: The locations of the hexagon center and the diameter of circle that will circumscribe the hexagon.

- ✓ **Step 1**: Draw the circle with given diameter taking given location as center.
- ✓ **Step 2**: Extend the compass upto a length equal to the radius of the ciecle.
- ✓ **Step 3:** Starting from any point, say A_1, on the circumference, cut 6 equal segments and mark the points as A_1, A_2, A_3, A_4, A_5 and A_6.

Step 4: Join each 2 consecutive points to obtain the hexagon A_1 A_2 A_3 A_4 A_5A_6.

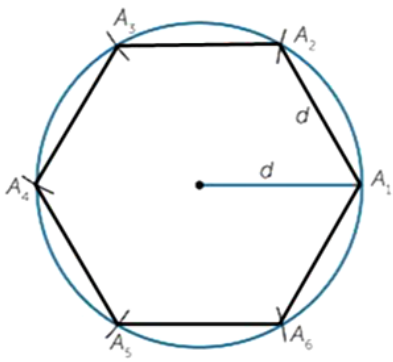

3.2 CONSTRUCTIONS OF SPECIAL CURVES

Cycloidal curves

Cycloidal curves are generated by a fixed point in the circumference of a circle when it rolls without slipping along a fixed straight line or circular path. The rolling circle is called the generating circle, the fixed straight line, the directing line and the fixed circle, the directing circle.

In physical world, cycloidal curves are used as cycloidal gears, epicyclic train dynamometer, epicyclic gear train, hypocycloid engine.

CYCLOID:
A cycloid is a curve generated by a fixed point on the circumference of a circle, when it rolls without slipping along a straight line.

PROBLEM : A circle of 50mm diameter rolls along a straight line without slipping. Draw the curve traced out by a point 'A' on the circumference, for the one complete revolution of a circle. Draw tangent and normal at any point on a curve.

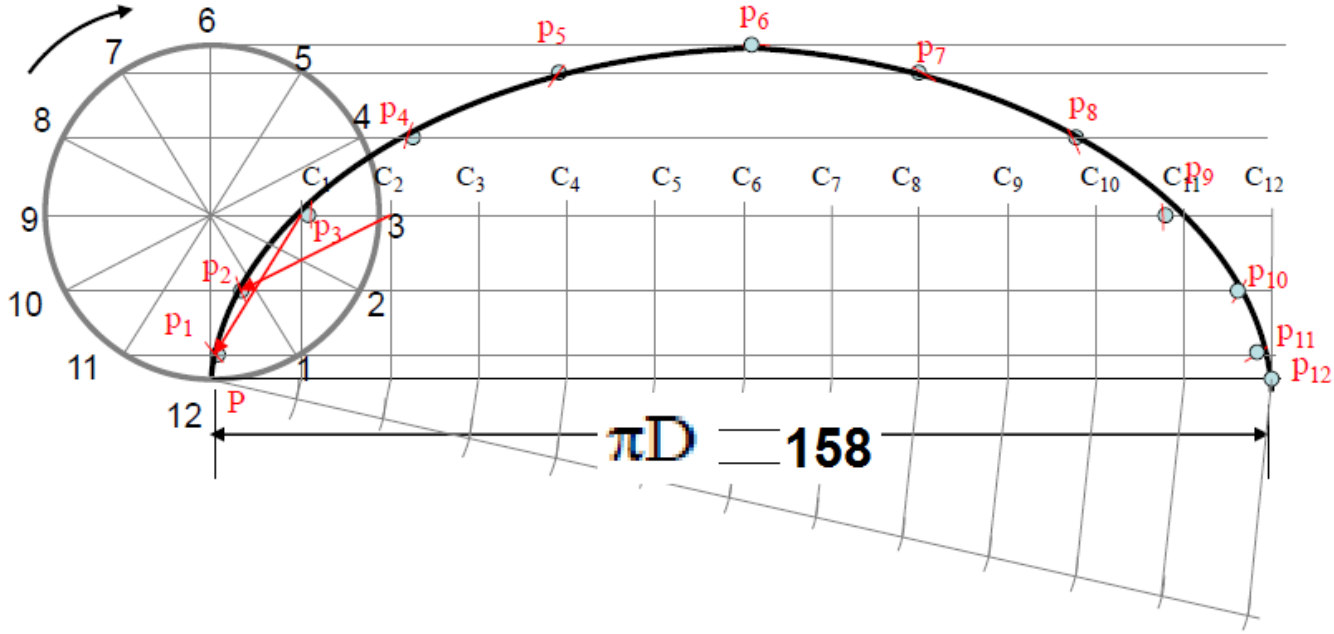

Solution Steps:
1) From center C draw a horizontal line equal to πD =158mm distance.
2) Divide πD =158mm distance into 12 number of equal parts and name them C1, C2, C3__ etc.
3) Divide the circle also into 12 number of equal parts and in anticlockwise direction, after P name 1, 2, 3 up to 12.
4) From all these points on circle draw horizontal lines. (parallel to locus of C)
5) With a fixed distance C-P in compass, C1 as center, mark a point on horizontal line from 1. Name it P.
6) Repeat this procedure from C2, C3, C4 up to C12 as centers. Mark points P2, P3, P4, P5 up to P12 on the horizontal lines drawn from 1,2, 3, 4, 5, 6, 7 respectively.
7) Join all these points by curve. It is Cycloid.

CYCLOID - Method of Drawing Tangent & Normal

1. Draw cycloid as usual.
2. Mark point Q on it as directed.
3. With 'CP' distance, from Q.
4. Cut the Point on locus of c and join it to Q.
5. From this point drop a perpendicular On ground line and name it N
6. Join N with Q, this will be normal to Cycloid.
7. Draw a line at right angle to this line from Q. It will be tangent to cycloid.

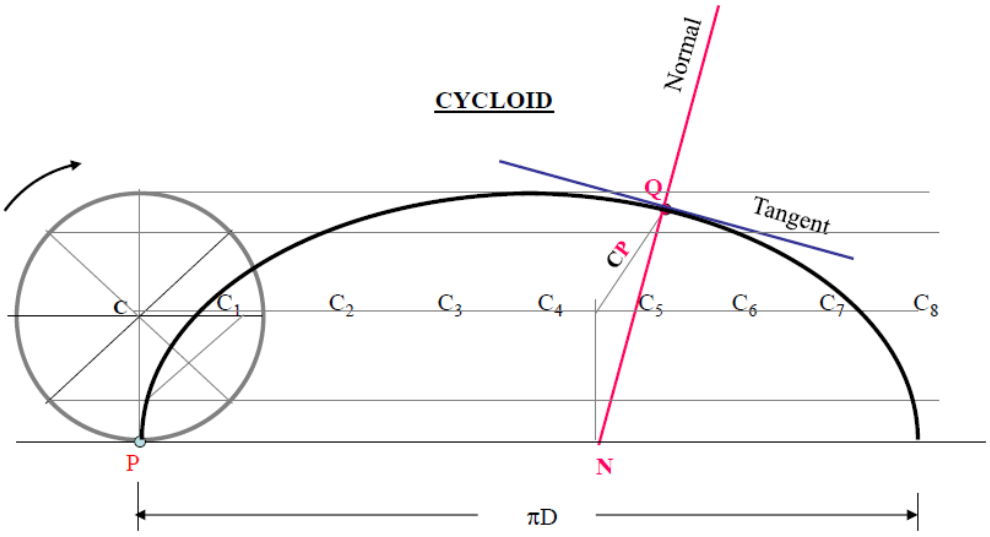

EPICYCLOID:

An epicycloid is a curve traced by a point on the circumference of a generating circle, when it rolls without slipping on another circle (directing circle) outside it.

PROBLEM : Draw locus of a point on the periphery of a circle which rolls outside on a curved path. Take diameter Of rolling Circle 50 mm And radius of directing circle is 100 mm / diameter is 200 mm.

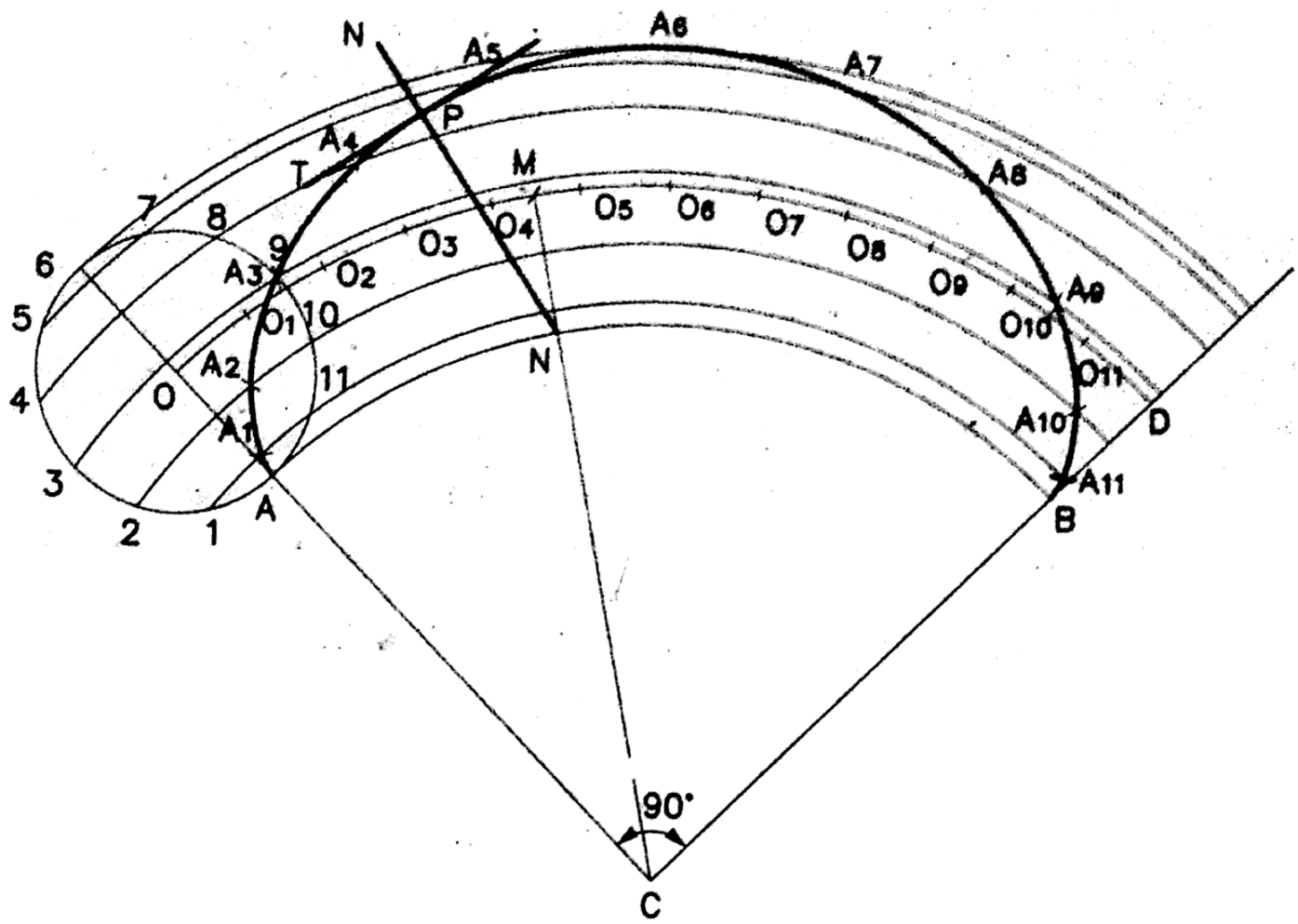

Construction

1. With C as centre and 200mm as diameter, draw the directing circle. (It is enough only a part of it may be drawn).
2. Mark a point A on the circle. Draw a line joining C and A and produce it to O, such that AO = radius of the rolling circle ie., 25mm
3. With O as centre and 50mm as diameter, draw the rolling circle. Let the points is thegenerating point
4. In one revolution of the rolling circle, the point A will move to B through a distance equal to circumference of the rolling circle.
5. The position of the point B can be calculated using the formula.

$$\frac{\angle ACB}{360^{O}} = \frac{\text{Arc AB}}{\text{Circumference of the Directing circle}} = \frac{\pi d}{\pi D} = \frac{d}{D}$$

$$\therefore \angle ACB = 360^{\circ} \times \frac{50}{200} = 90^{\circ}$$

6. Mark the point B such that $\angle ACB = 90^{O}$.
7. With C as centre and CO as radius draw an arc interesting CB produced at D.
8. Divide the rolling circle and the arc OD into 12 equa parts. Mark the division points on the circle and on the arc OD as 1,2,3 - - - 12 and O_1, O_2, O_3 - - - O_{12}.
9. With C as centre and C-1, C-2, C-3,etc as radius draw arcs.
10. With O_1, O_2, O_3 etc as centres and 25mm as radius draw arcs intersecting the drawn arcs through 1,2,3 etc at points A_1, A_2, A_3 etc.,
11. Draw a smooth curve through A, A_1, A_2, A_3, ... B. This curve is the required epicycloid.

Tangent and normal

1. Mark any point P on the curve.
2. With P as centre and 25mm as radius draw an arc which cuts the arc OD at M.
3. Draw a line joining M and C. This line cuts the arc AB at N.
4. Draw a line joining P and N. This line NN is the normal to the epicycloid at P.
5. Through P draw a line TT at right angle to NN. The line TT is the tangent to the curve.

HYPOCYCLOID:

A hypocycloid is a curve traced by a point on the circumference of a circle when it rolls without slipping on the inside of another circle.

PROBLEM :

Draw locus of a point on the periphery of a circle which rolls from the inside of a curved path. Take diameter of rolling circle 70 mm and radius of directing circle (curved path) 105 mm.

Construction

1. With C as centre and 105mm as diameter draw the directing circle. (It is enough, only a part of it may be drawn)
2. Mark a point A on the circle. Draw a line joining C and A.
3. With A as centre and 17.5mm as radius (ie radius of the rolling circle) draw an arc, which cuts the line CA and O.
4. With O as centre and 35mm as diameter draw the rolling circle. The point A is generating point.
5. In one revolution of the rolling circle, the point A will move to B through a distance equal to the circumference of the rolling circle.

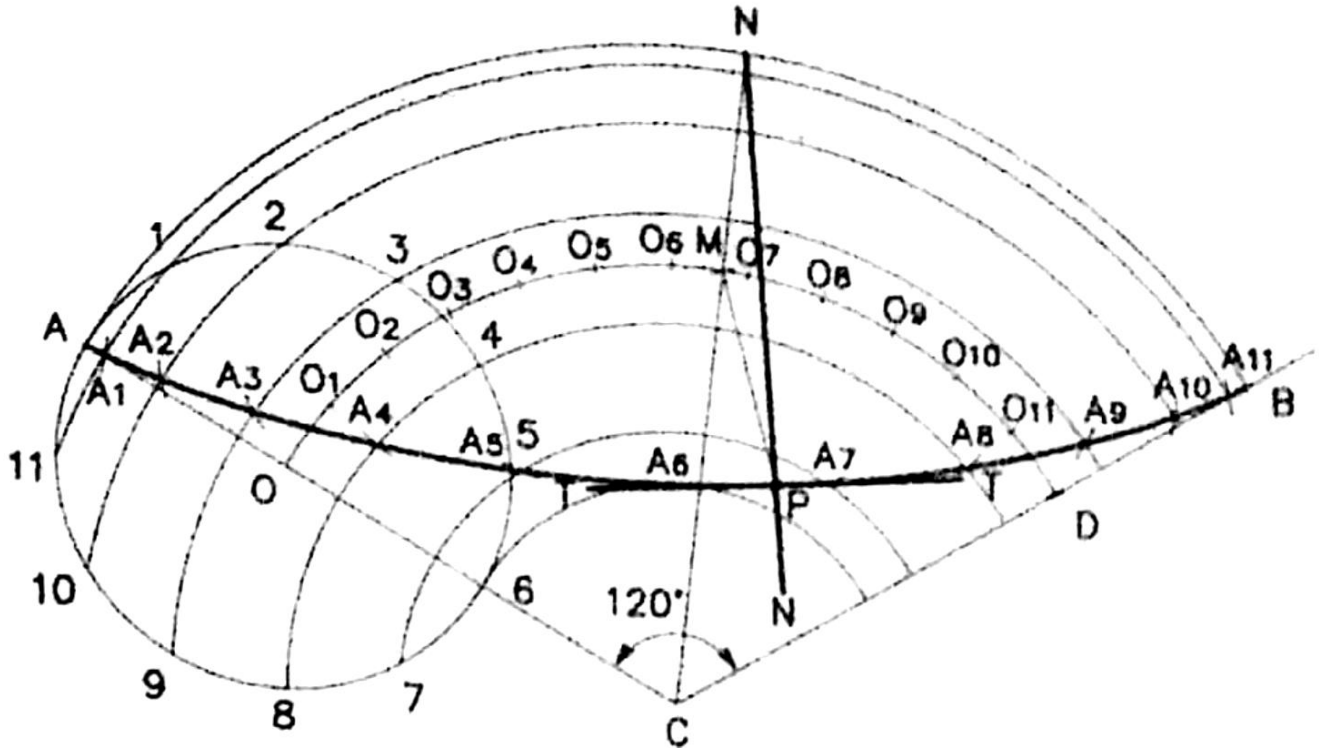

6. The position of the point B can be calculated using the formula.

$$\frac{\angle ACB}{360^\circ} = \frac{\text{Arc AB}}{\text{Circumference of the Directing circle}} = \frac{\pi d}{\pi D} = \frac{d}{D}$$

$\therefore \angle ACB = 360 \times \frac{35}{105} = 120^\circ$. Mark the point B such that $\angle ACB = 120^\circ$.

7. With C as centre and CO as radius draw arc intersecting the line CB at D.
8. Divide the rolling circle and the arc OD into 12 equal parts. Mark the divisions points on the circle and on the arc OD as 1,2,3 - - - 12 and O_1, O_2, O_3 - - - O_{12}.
9. With C as centre and C-1, C-2, C-3, etc as radius draw arcs.
10. With O_1, O_2, O_3, etc as centre and 17.5mm as radius draw arcs intersecting the arcs drawn through 1,2,3 etc at A_1, A_2, A_3 etc.
11. Draw a smooth curve through A, A_1, A_2, A_3 . . . . . .B. This curve is the required hypocyloid.

Tangent and Normal

Follow the same procedure that is followed in the epicycloid curve.

INVOLUTE

Definition

An involute is a curve generated by a point on a tight string as it is unwound from a circle or a polygon.

Applications

1. Involute of a circle is used as teeth profile of gearing and gear cutting tools.
2. It is used in the design of impellers of centrifugal pumps.

Draw one turn of an involute of a circle 50mm in diameter. Draw also a tangent normal to the curve from any point on the curve. (Arpil ' 92).

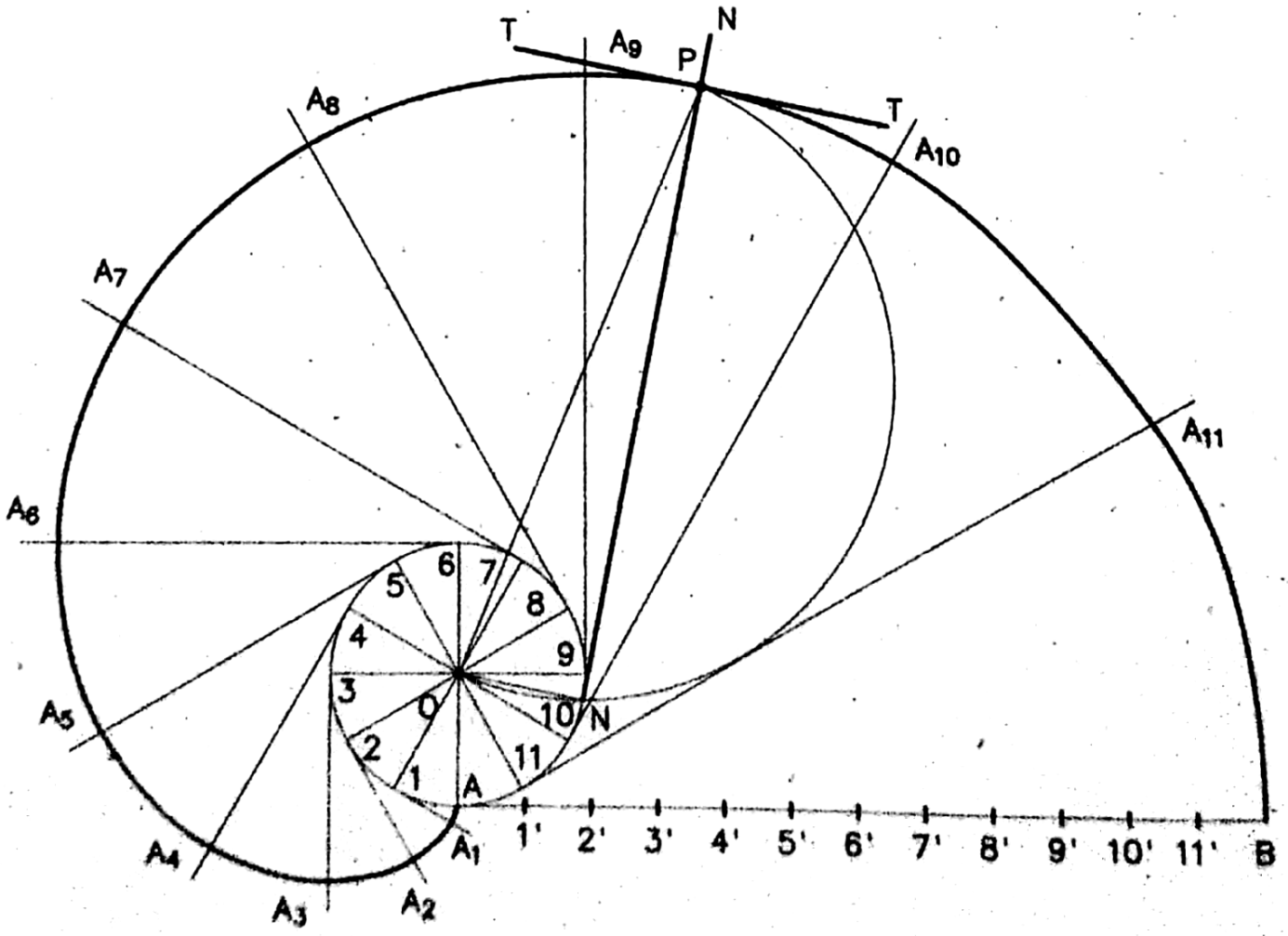

Construction

1. With O as centre and 50 mm as diameter draw a circle.
2. Draw a line AB, tangent to the circle and equal to the circumference of the circle (ie AB = πD)
3. Divide the circle and line AB into 12 equal parts.
4. Mark the division points in the circle and on the line as 1,2,3 - - - - 12 and 1',2',3' - - - 12'.
5. Draw tangents to the circle at the points 1, 2,3 etc.,
6. Mark a point A_1 on the tangent at 1 such that 1-A_1 = A-1'.
7. Similarly, mark the points A_2, A_3, A_4 etc such that 2-A_2= A-2', 3-A_3 = A-3', 4-A_4 = A-4' etc
8. Draw a smooth curve through A, A_1, A_2, A_3. . . . . B.
9. This curve is the involute of the circle.

Tangent and Normal

1. Mark any point P on the involute.
2. Draw a line joining P and O.
3. With OP as diameter, draw a semicircle intersecting the given circle at N.
4. Draw a line joining P and N. This line NN is the normal to the involute at P.
5. Draw a line TT through P, perpendicular to NN. This line TT is the tangent to the involute at P.

SPIRALS

Definition

It is a curve traced out by a point moving continuously in one direction along a straight line, while the straight line revolves about a fixed point.

The line which rotates about the fixed point is called a **pole**.

The line joining any point on the spiral with the pole is known as **radius vector**.

The angle between the radius vector in its initial position and any radius vector is known as the **vectorial angle**.

ARCHEMEDIAN SPIRAL

Definition

It is a curve generated by a point moving in such a way that its movement towards or away from the pole is uniform with the increase of the vectorial angle from the starting line.

Applications

1. It is used in design of profiles of gear tooth, profiles of cams etc.
2. It is used to provide the spring action of clocks, watches.

NOTE:

- If a spiral makes one convolution to reach the pole, then the angular movement of the radius vector is 360°. Here divide the angular movement into 12 equal parts.
- If a spiral makes one and half ($1_{1/2}$) convolution to reach the pole, then the angular movement of the radius vector is $360^{O} \times 1_{1/2} = 540^{O}$. Here divide the angular movement into 18 equal parts.
- If a spiral makes two convolution to reach the pole, then the angular movement of the radius vector is $360^{O} \times 2 = 720^{O}$. Here divide the angular movement into 24 equal parts.

PROBLEM:

Draw an Archimedian Spiral of one convolution for the pitch (or radius) of 35 mm.

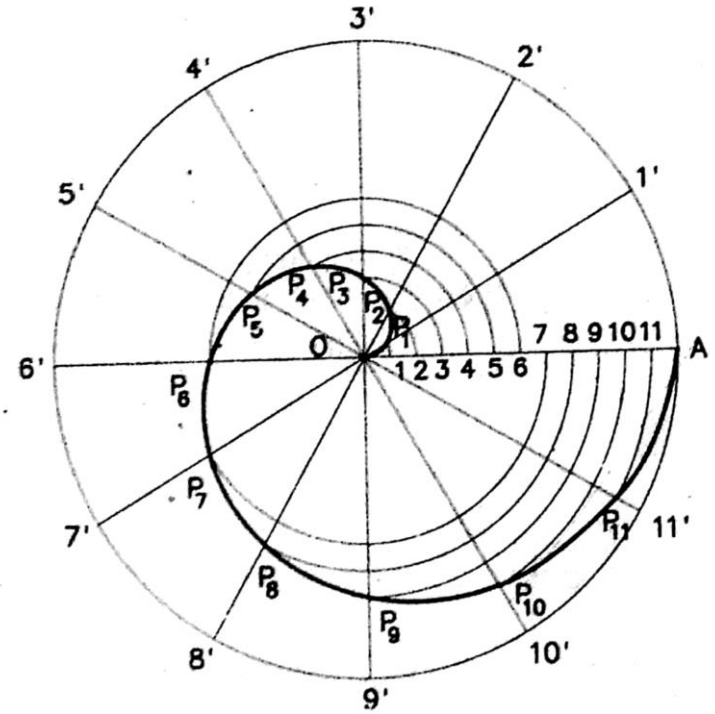

Construction

Here, pitch or radius means the distance travelled by the generating point along the straight line ie the distance between the pole and the generating point.

1. Let O be the pole and OA be the radius or pitch.
2. With O as centre and OA as radius draw a circle.
3. Divide the line OA and the angular movement of OA ie the circle into 12 equal parts.
4. Mark the division points on the line OA and the circle as 1,2,3 - - - 12 and 1',2',3' - - - 12' as shown in fig.
5. Join the division points of the circle with the pole O.
6. With O as centre and O-1,O-2,O-3,O-4, etc as radius, draw arcs which intersecting the radial lines O-1',O-2',O-3',O-4' etc at P_1,P_2,P_3, etc.
7. Draw a smooth curve through O, P_1,P_2 . . . . . P_{11} and A. This curve is the required spiral of Archimedes.

HELIX

Definition

It is a curve traced out by a point, moving around the surface of a right circular cylinder in such a way that, its axial advance is uniform with its movement around the surface of the cylinder.

The axial distance moved by the generating point for each revolution of the cylinder is known as *pitch* or the *lead* of the helix.

Applications

The helix curve used in springs, spiral stair the casses, conveyors etc.

Example - 2-2-4

Draw a helix of one revolution on a cylinder of diameter 50mm and height 100mm. Given the pitch as 90mm.

Construction

1. Draw the top view and elevation of the cylinder as shown. The top view is a circle of 50mm diameter. The elevation is a rectangle with breadth is equal to 50mm and height is equal to 100mm.
2. In the elevation mark AB=90mm as the pitch of the helix.
3. Divide the circle and line AB into 12 equal parts.
4. Mark the division points on the circle and on the AB as 1,2,3 - - - 12 and 1',2',3' - - - 12'.
5. Draw the horizonal lines from the division points of the circle.
6. Draw vertocal lines from 1',2',3', etc meet the orizontal lines from 1,2,3 at P_1,P_2,P_3 etc.
7. Draw a smooth curve through A,P_1,P_2,P_3 . . . . . B. This curve is the required helix.
8. The portion of the curve from P_6 to B is on the rear side of the cylinder. Hence join P_6 to B with dotted lines

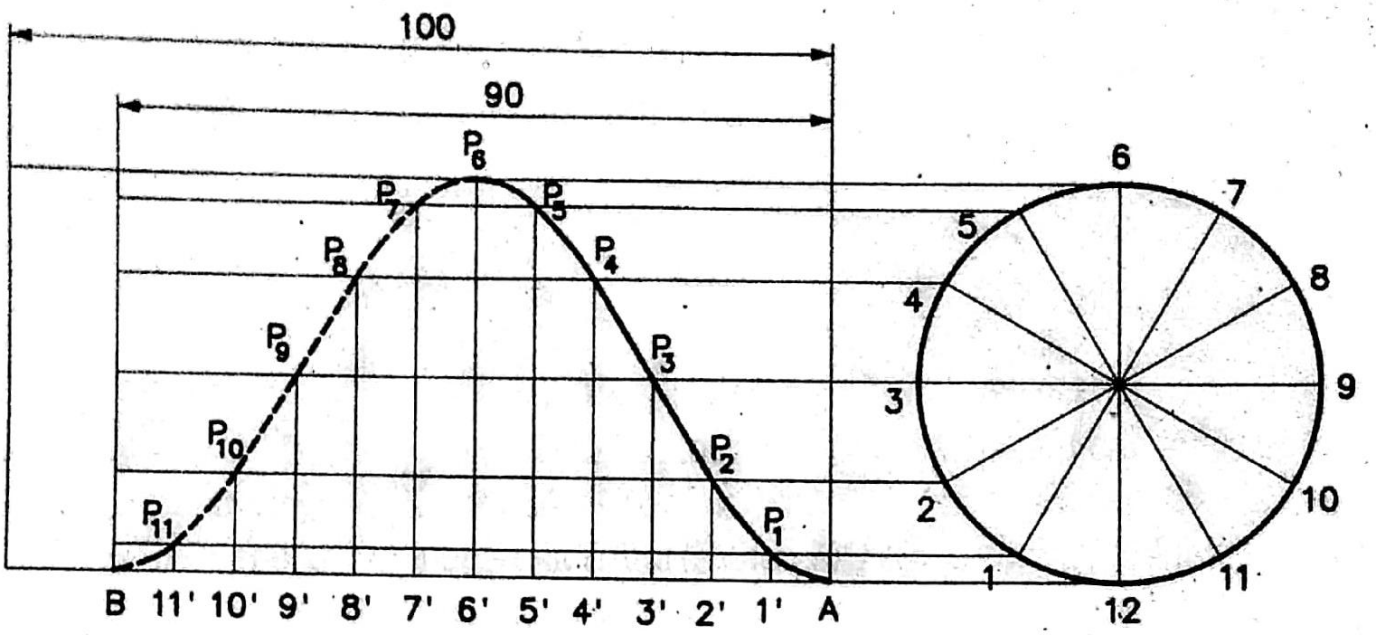

EXERCISES

INVOLUTE

1. Draw an involute of a circle of 40mm diameter. Also draw a tangent and a normal at any point on it.
2. Draw the focus of a coir rope is unwound through an angle of 180° from a cylindrical drum of diameter 80mm.

SPIRAL

1. Draw an spiral of Archimedes makes one convolution in a circle of 80mm in diameter.
2. Draw an Archemedian spiral of 1-1/2 convolutions, the longest and shortest radii being 190mm and 10mm respectively.
3. Draw an Archemedian spiral of 2 convolutions, the greatest and least radii being 250mm and 10mm respectively.

HELIX

1. Draw one turn of a helix of pitch 60mm on a cylinder of 70mm diameter and 90mm height.

CYCLOIDAL CURVES

1. A coin having 40mm diameter rolls over a table without slipping. Draw the focus of a point on the circumference of the coin for one complete revolution. Name the curve. Draw a tangent and a normal at any point on it.
2. A circle of 40mm in diameter rolls on the circumference of another circle of 180mm in diameter and outside it. Trace the focus of a point on the circumference of the rolling circle for one revolution. Name the curve.
3. The diameter of the directing circle is 240mm. The diameter of the rolling circle is 40mm. Draw a hypocycloid.

UNIT IV –ORTHOGRAPHIC PROJECTONS

Introduction

Projection:

Projection is defined as an Image or drawing of the object made on a plane. The lines form the object to the Plane are called projectors.

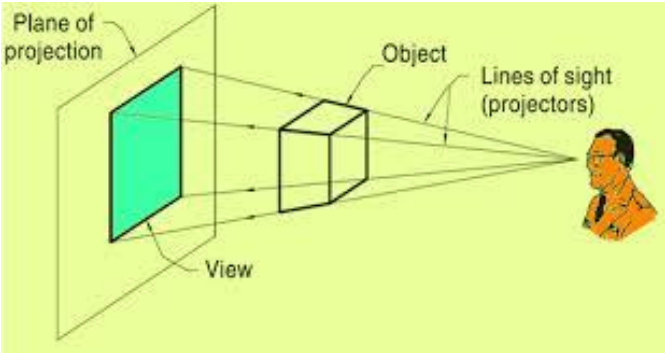

Methods of Projections:

In Engineering drawing the following four methods of Projection are commonly used they are

(1) Orthographic Projection

(2) Isometric projection

(3) Oblique projection

(4) Perspective Projection

In orthographic projection an object is represented by two are three views on the mutual perpendicular projection planes each projection view represents two dimensions of an object.

In isometric projection, oblique and perspective projections represents the object by a pictorial view as eyes see it. In these methods of projects in three dimensional object is represented on a projection plane by one view only.

Orthographic Projection

- When the Projectors are parallel to each other and also perpendicular to the plane the projection is called orthographic Projection.
- This is such a type of drawing in which Parallel Projection is used for the preparation of the drawing of an object.
- These lines are perpendicular to the plane.
- In this drawing, it is assumed that the object is at infinity.
- The shape of an object is seen in actual size in such drawing.

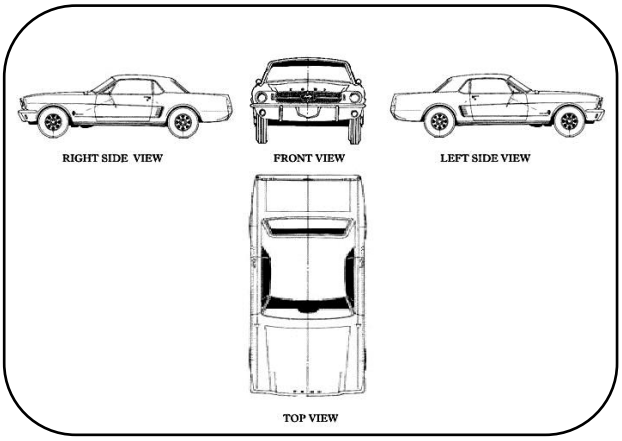

Example: Orthographic projection of a car shown in figure**.**

- A plane is an imaginary surface on which pictures are prepared imaginably. Then it is transferred to the paper.
- This plane is faced toward the object whose view is to be prepared.
- Generally, three views of an object are prepared. These are Top View, Front View, and Side View.

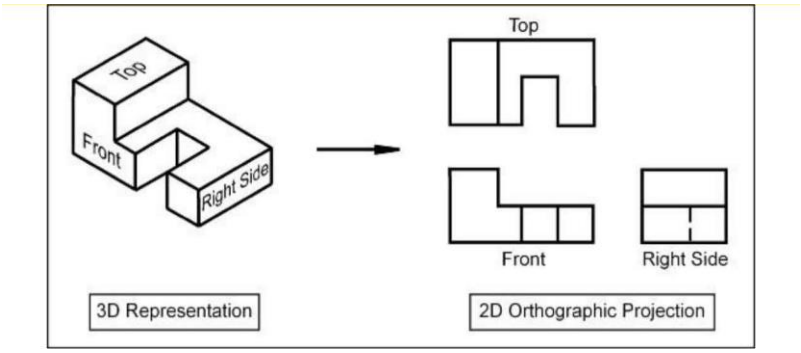

Terms used in Orthographic Projection:

- If the plane is kept in a vertical position, then it is called the **Vertical Plane &** denoted as **VP.**
- If the plane is kept in a horizontal position, then it is called the **Horizontal Plane &** denoted as **HP. (**Both VP & HP, which are kept perpendicular to each other, are called **Principle Planes)**
- The line of intersection between the principle planes is known as **Reference Line (XY line).**
- If the plane which is placed to the right or left of an object. Side view of the object is drawn on this plane is called **Profile Plane.**

Front View:
This view is prepared by placing the object in front. The length and height of an object are shown in this view.

Top View:
This view is prepared by looking to the object from the upper side. The length and breadth of the object are shown in it.

Side View:
This view is prepared by looking to the object from the right side or left side. The breadth and height of the object are shown in it.

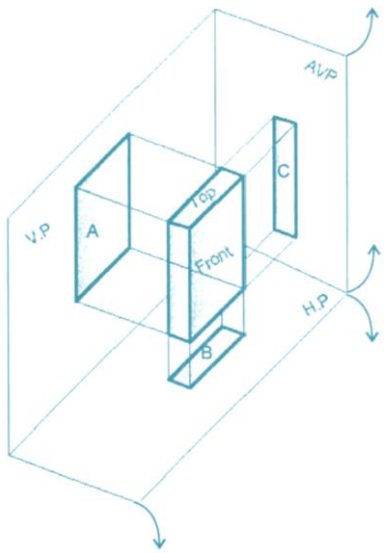

Four quadrants:

The intersection of mutual perpendicular Planes i.e VP and HP Form Four quadrants as shown in figure 5.5. Here planes to be assumed transparent here the object may be situated any one of four quadrants. The projections are obtained by drawing perpendiculars from the object to the planes, i.e by looking from the Front and Top. It should be remembered that the first and third quadrants always opened out while rotating the planes. The position of views with respectto the reference line will change according to quadrant in which object may be situated.

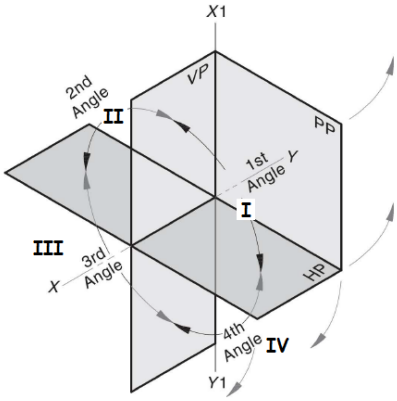

Four quadrants & 3 Principle planes

Systems of Orthographic Projection.

To prepare an orthographic drawing, the selection of one quadrant of dihedral and or one octant of a trihedral angle is made.

In this way the following four systems are formed:

1. First Angle System.

2. Second Angle System.

3. Third Angle System.

4. Fourth Angle System.

- **Generally, First Angle System and Third Angle System are used.** It is because in the Second Angle System and Fourth Angle System, the lines of views of the object overlap.
- Therefore, clear pictures cannot be obtained.

1. First Angle Projection:

The views of an object should be taken by placing it in the first quadrant, Such a system is called **First Angle Projection.**

By taking the Front view on the frontal plane, top view on the horizontal plane and side view on the Profile plane, the planes are then straightened by rotation.

In this way, the front view comes over the top view; side view comes beside the front view.

Characteristics of First Angle Projection:

1. Front view always comes over the top view.

2. Top view always comes under the front view.

3. Right side view always comes to the left at the front view.

4. Left side view always comes to the right of the front view.

5. The view is always in opposite direction to the observer.

6. The object is always in the middle of the view and the observer.

2. Third Angle Projection

If the views of an object are taken by placing it in the third quadrant, Such a system is called **Third Angle Projection.**

Here, front view forms on the frontal plane, top view forms on the horizontal plane and side view forms on the profile plane.

After making the views, the planes are set straight by rotation.

In this way, the top view comes over the front view, while side view forms by the side of front view.

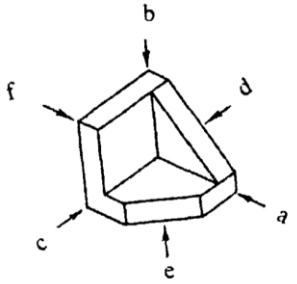

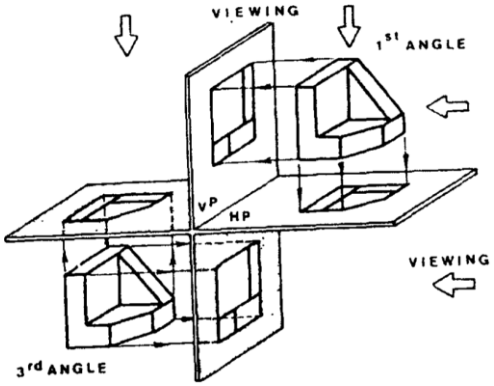

Characteristics of Third Angle Projection:

1. Top view always comes over the Front view.

2. Front view always comes under the top view.

3. Right side view always comes to the right of the front view.

4. Left side view always comes to the left of the front view.

5. The view is always formed to the side of the observer.

6. The view is always in the middle of the object and the observer.

Symbol of projection

As per B.I.S recommendation, to draw two views of frustum of a cone, that indicates the symbol of First angle and Third angle Projection.

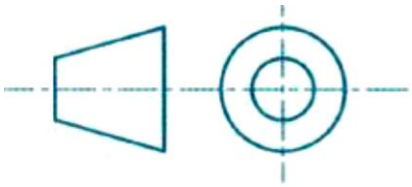

FIRST ANGLE PROJECTION

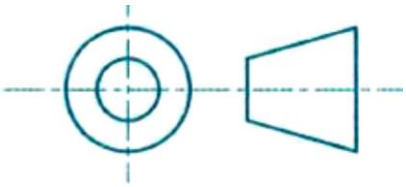

THIRD ANGLE PROJECTION

First angle projection	Third-angle projection
Object is kept in the first quadrant.	Object is assumed to be kept in the third quadrant.
Object lies between observer and the plane of projection.	Plane of projection lies between the observer and the object.
The plane of projection is assumed to be non-transparent.	The plane of projection is assumed to be transparent.
Front (elevation) view is drawn above the XY line	Front (elevation) view is drawn below the XY line
Top (plan) view is drawn below the XY line	Top (plan) view is drawn above the XY line
Left view is projected on the right plane and vice versa	Left view is projected on the left plane itself.
Followed in India, European countries	Followed in USA

General Procedure:

- Determine the overall dimensions of the required views.
- Select suitable scale to accommodate the required views on the drawing sheet.
- Mark out the overall space required for each view in the form of rectangle leaving 30 to 50mm space between views.
- Draw the centre line for circle and arcs compulsory.
- Draw the circles and arcs boldly.
- Draw the object lines boldly from the construction line.
- Draw the hidden lines on the projection line.
- Add dimensions and other notes by distributing in all the views.
- Mention the particulars in the title block.

Some solved Examples

Draw the front view, Top view and Side view of the given figure

Example : 1

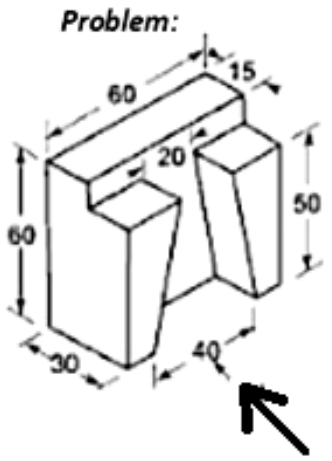

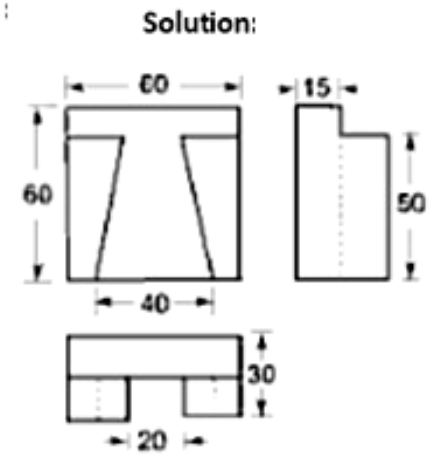

Example : 2

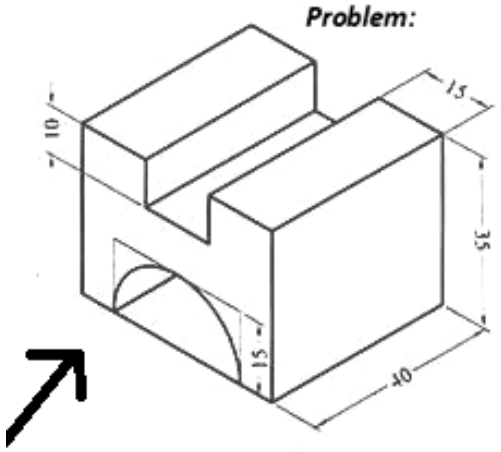

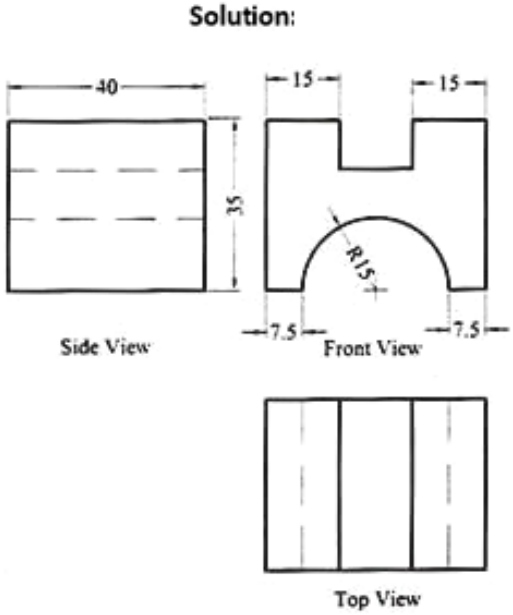

Example : 3

Problem:

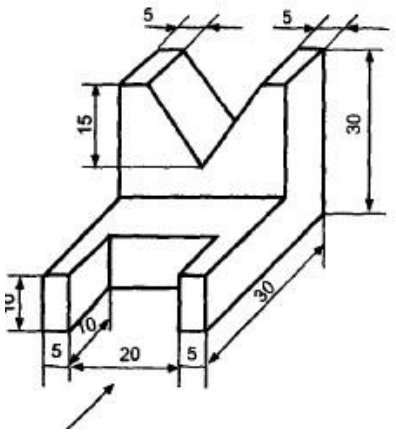

Solution:

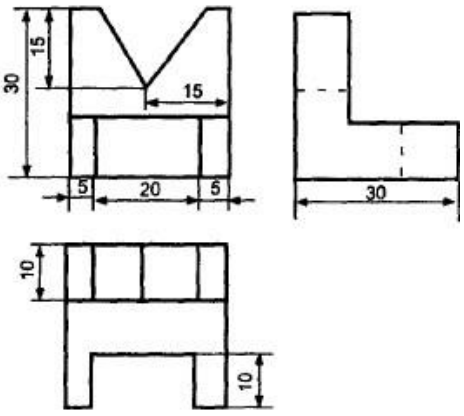

Example : 4

Problem:

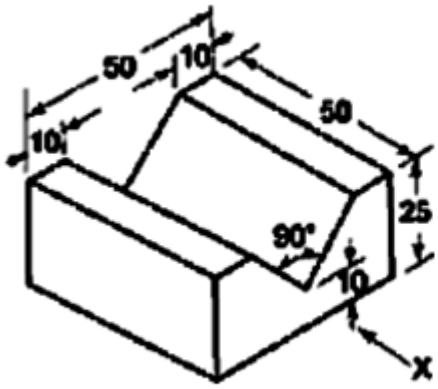

Solution:

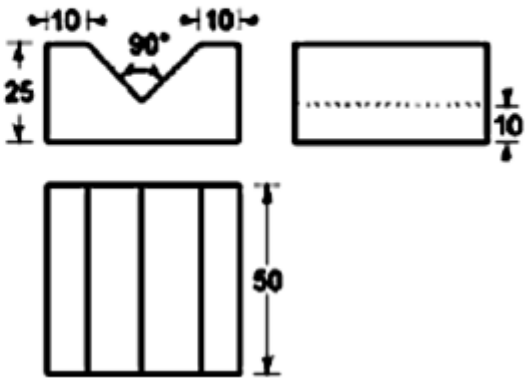

Example : 5

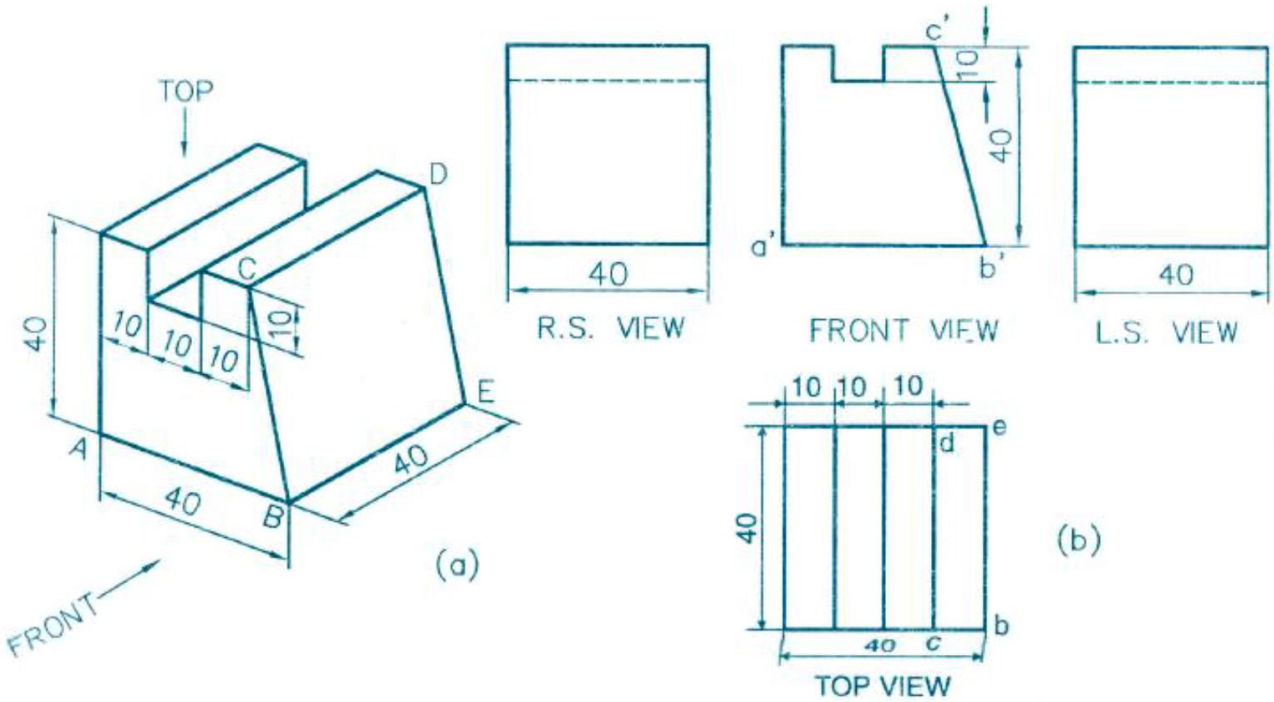

EXERCISES

Draw Front View, Top view and Side view for the figure shown below. All dimensions are in mm.

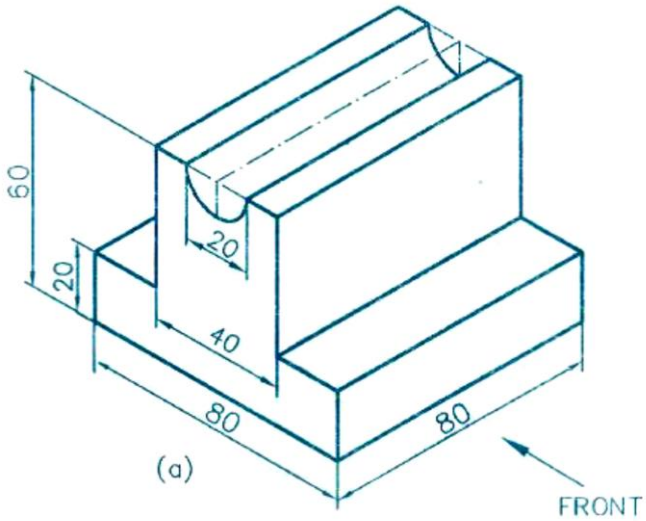

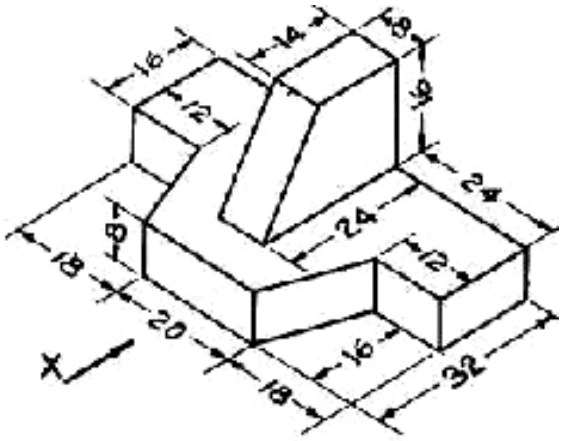

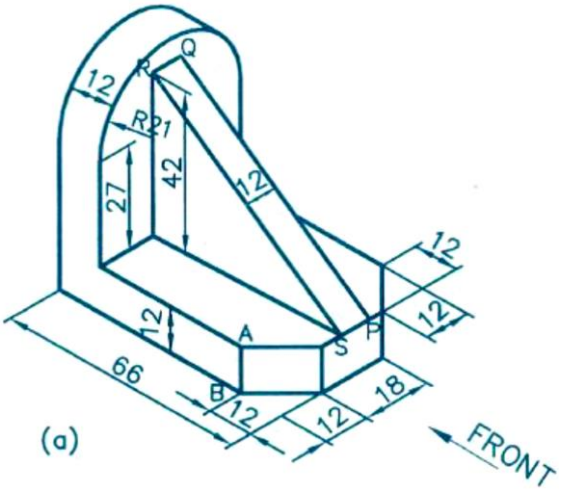

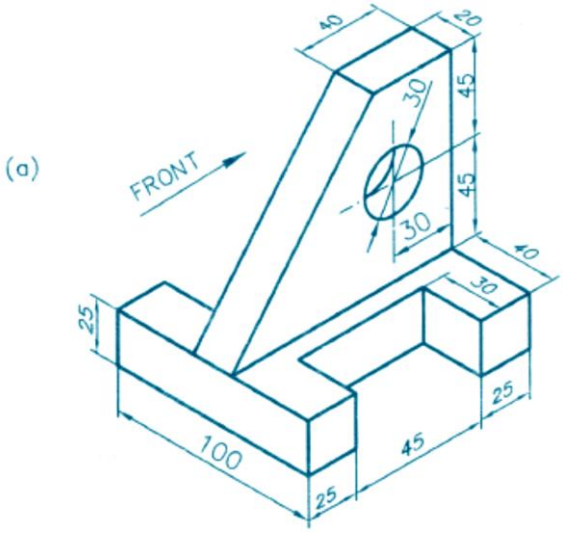

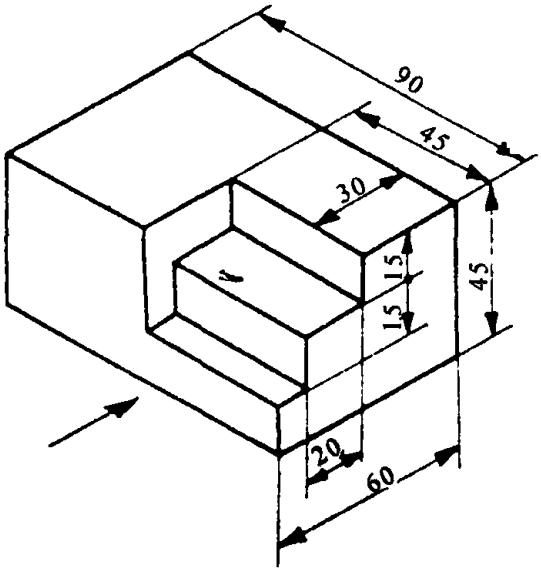

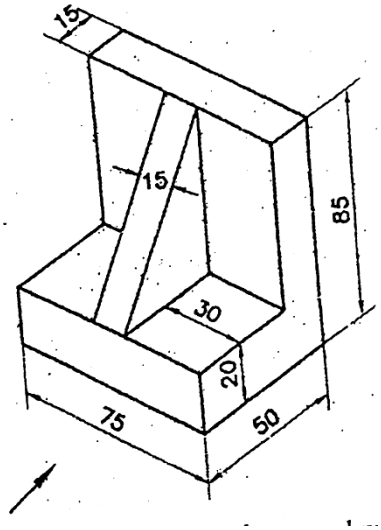

MODEL QUESTION - I

[Note: Answer all questions in drawing sheets only. Assume missing dimensions suitably]

PART-A **(3 X 5= 15 Marks)**

Answer all the questions. Each question carries five marks.

1. Write the following statement in a single stroke vertical capital letters with 7mm height.
   "Our mission is to produce quality technocrats"

2. Divide the circle of diameter 60 mm into 8 equal divisions.

3. Draw the regular hexagon with base size of 25mm.

PART-B **(4 X 15= 60 Marks)**

Answer any four questions. Each question carries fifteen marks.

4. Redraw the given figure to full size and dimension it as per BIS.

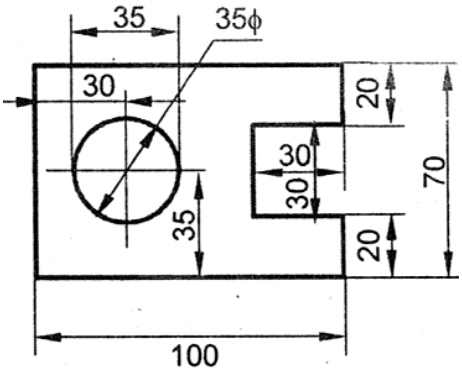

5. A fish pond of elliptical shape is to be inscribed inside rectangular plot of size 90x50 meters. Draw the profile of fish pond by concentric circle method by assuming suitable scale.

6. The profile of reflector of a four wheeler is in the form of parabola. The rim of diameter is 85mm and maximum depth is 45mm.Draw the profile of parabola.

7. Draw the involute of a circle of diameter 35 mm and draw a tangent and normal at any point on the curve.

8. The figure below shows the pictorial view of an object. Draw the following views to full size scale.
   a. Front view
   b. Left side view

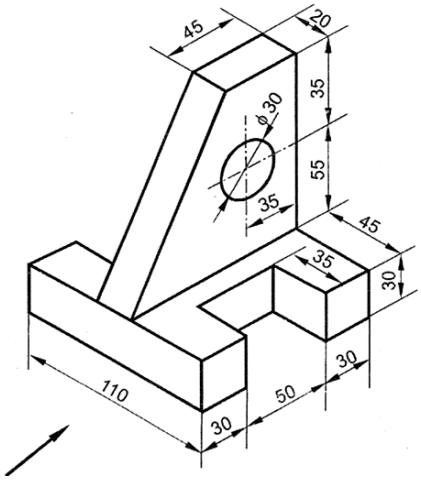

9. The pictorial view of an object is shown fig. Draw the following views to full size scale.

a. Front view
b. Top view

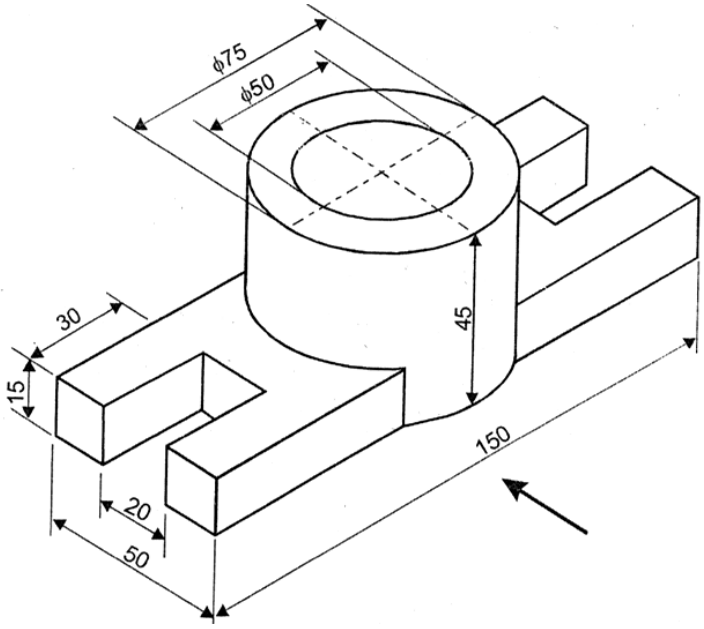

MODEL QUESTION - II

[Note: Answer all questions in drawing sheets only. Assume missing dimensions suitably]

PART-A **(3 X 5= 15 Marks)**

Answer all the questions. Each question carries five marks.

1. Write the following statement in a single stroke vertical capital letters with 5 mm height.
   "Dimension lines should not cross each other"
2. Divide a line 100mm long into seven equal parts.
3. Draw the regular Pentagon with side of base 30mm.

PART-B **(4 X 15= 60 Marks)**

Answer any four questions. Each question carries fifteen marks.

4. Redraw the given figure to full size and dimension it as per BIS.

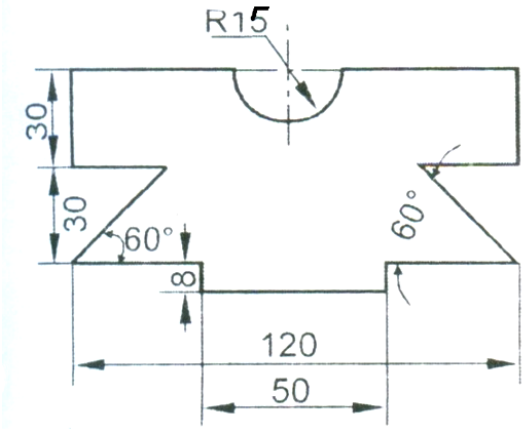

5. Inscribe on a ellipse in a rectangle of size 100mm and 70mm.
6. A ball thrown up in a air reaches a maximum height of 60 metres and falls at a distance of 90 metres from the place where its thrown. Trace the path of the ball.
7. A coin of diameter 35mm rolls along a straight line without slipping. Draw the curve generated by a point and circumference of a coin. Also draw a tangent and normal at any point on a curve.
8. The figure below shows the pictorial view of an object. Draw the following views to full size scale.
   c. Front view
   d. Left side view

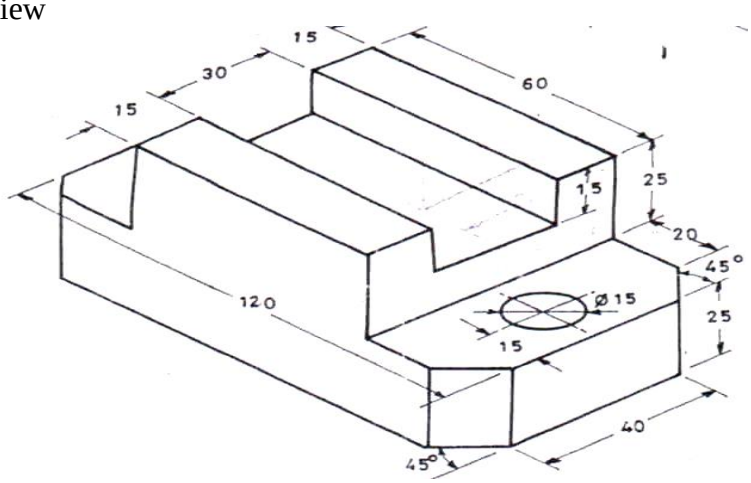

9. The pictorial view of an object is shown fig. Draw the following views to full size scale.

c. Elevation in the direction of X

d. Top view

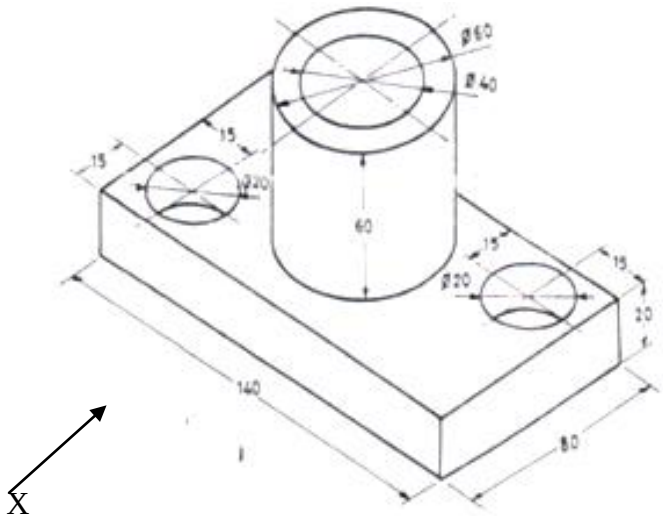

VISION

"To be an Institute of Excellence in Technical Education and Training of individuals , Focusing on the needs of the Nation and Society in tune with Technological Developments"

MISSION

"Our Mission is to Produce Disciplined and Quality Technocrats through Academic Programme of Noted Excellence to Serve the Society"

QUALITY POLICY

Virudhunagar S. Vellaichamy Nadar Polytechnic College intends to produce a disciplined and quality technocrats by imparting value added technical education and training by reinforcing our bonds with industry, parents, alumni and students and to continuously develop an innovative and excellence in every sphere of education, faculty improvement and all facilities through continual improvement of quality management system with whole human development