VIRUDHUNAGAR S.VELLAICHAMY NADAR POLYTECHNIC COLLEGE
(Affiliated to Directorate of Technical Education, Chennai 600 025)
Virudhunagar - 626 001

MISSION

"Our Mission is to Produce Disciplined and Quality Technocrats through Academic Programme of Noted Excellence to Serve the Society"

VISION

"To be an Institute of Excellence in Technical Education and Training of individuals , Focusing on the needs of the Nation and Society in tune with Technological Developments"

COURSE MATERIAL	
SCHEME	**N1**
PROGRAMME	**Basic Engineering**
TERM	**I**
COURSE	**Engineering physics-I Practical**
PREPARED BY	**M. Reka Devi** **S. Sudhakar Jacob**
VERIFIED BY	

DEPARTMENT OF BASIC ENGINEERING

List of Experiments

S.No	Date	Title of the experiment	Marks	Sign (With Date)
1.		Screw Gauge		
2.		Vernier Caliper		
3.		Parallelogram Law of Forces		
4.		Lami's Theorem		
5.		Comparison of Viscosities of two Liquids		
6.		Co-efficient of Viscosity – Stoke's Formula		
7.		Sonometer		
8.		Deflection Magnetometer		

Expt. No : Date :	SCREW GAUGE

Aim:

1) To find the thickness of the given irregular glass plate
2) To find the volume of the glass plate.

Apparatus Required:

Screw Gauge, Irregular glass Plate, Graph sheet

Description:

The screw gauge is an instrument used for measuring accurately the diameter of a thin wire or the thickness of a sheet of metal. It consists of a U-shaped frame fitted with a screwed spindle which is attached to a thimble. Parallel to the axis of the thimble, a scale graduated in mm is engraved. This is called pitch scale. A sleeve is attached to the head of the screw.

The head of the screw has a ratchet which avoids undue tightening of the screw. On the thimble there is a circular scale known as head scale which is divided into 50 or 100 equal parts. When the screw is worked, the sleeve moves over the pitch scale.

A stud with a plane end surface called the anvil is fixed on the 'U' frame exactly opposite to the tip of the screw. When the tip of the screw is in contact with the anvil, usually, the zero of the head scale coincides with the zero of the pitch scale

Formula:

Volume of the irregular glass plate 'V' = Area x Thickness of the glass plate (m^3).

Pre experiment questions:

1. What is gauge?
2. What are the two scales in screw gauge?
3. What is zero error in screw gauge?
4. What is least count?

Procedure:

First, the pitch, least count, zero error and zero correction are determined.

- To find the pitch, give 5 rotations to the head and note the distance moved by the pitch scale. Then

$$\text{Pitch} = \frac{\text{Distance moved by the pitch scale}}{\text{Number of rotations given to the head}}$$

- Least Count is calculated using the formula

$$\text{L.C.} = \frac{\text{Pitch}}{\text{No. of divisions on the head scale}}$$

- To find the zero error, the head is rotated until the two studs are just in contact. In this position,

➢ If the zero of the head scale coincides with the base line (axial) of the pitch scale and the edge coincides with the pitch scale zero, then there is no error. Hence there is no zero correction. (e.g.) Fig(i)

➢ If the zero of the Head scale is below the base line of the pitch scale, the error is +ve and the correction is –ve. (e.g.) Fig(ii)

Zero error = (+5 x L.C); Zero correction = (-5 x L.C)

➢ If the zero of the head scale is above the base line of the pitch scale then the error is –ve and the correction is +ve. (e.g) Fig (iii)

Zero error = (- 5 x L.C); Zero correction = (+5 x L.C)

To find the thickness of the irregular glass plate:

➢ The given irregular plate is held between the two studs.

➢ The pitch scale reading [P.S.R] (ie), the division on the pitch scale which is just before the edge of the head scale is noted.

➢ The head scale coincidence [H.S.C.] (ie) the division on the head scale which coincides with the base line of the pitch scale is noted.

➢ Then,

The observed reading O.R = P.S.R + (H.S.C x L.C)

The correct reading C.R = O.R ± Z.C are calculated

- The experiment is repeated for different positions of the glass plate and the readings are tabulated.

To find the area of the irregular glass plate:

- The given irregular glass plate is placed on the graph sheet.
- The outline of the glass plate is traced with a pencil.
- By counting the number of squares inside the boundary, the area of the glass plate is determined.

Result:

1. Thickness of the glass plate =……. m
2. Area of the glass plate =……. m^2
3. Volume of the glass plate =……. m^3

Post experiment questions:

1. What is meant by pitch of a screw gauge?
2. How the least count of a screw gauge is found?
3. When the zero error is positive?

Diagram:

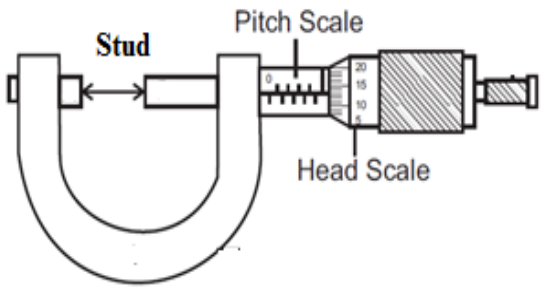

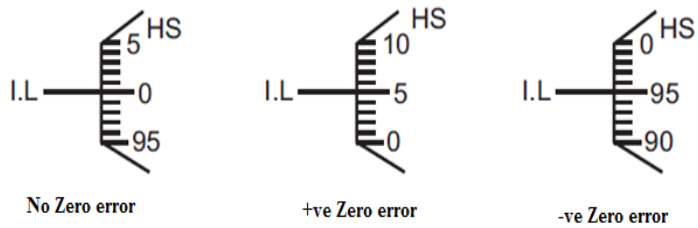

Fig (i) **Fig(ii)** **Fig(iii)**

Observations:

Pitch of the screw (P)

$$\text{Pitch P} = \frac{\text{Distance moved by the pitch scale}}{\text{Number of rotations given to the head}} = \frac{5\text{mm}}{5}$$

= 1 mm

Number of Head scale Divisions = 100 div

$$\text{Least Count} = \frac{\text{Pitch}}{\text{No. of divisions on the head scale}} = \frac{1}{100}$$

= 0.01 mm

Zero Error = ……divisions

Zero correction = ……divisions

Thickness of the Irregular Glass Plate:

L.C. = 0.01 mm Z.C = ……div.

S.No.	P.S.R mm	H.S.C Divisions	C.H.S.C Divisions	Correct Reading = P.S.R+(C.H.S.CxL.C) mm
1				
2				
3				
4				
5				

Mean =

Calculation:

Thickness of the irregular glass plate = …… x 10^{-3}m

Area of the irregular glass plate = …… x $10^{-6}m^2$

∴Volume of the glass plate = Area x Thickness

=……..x …….

= …… m^3.

Expt. No : Date :	VERNIER CALIPER

Aim:

To determine the volume of the solid cylinder using vernier caliper.

Apparatus Required:

Vernier caliper, Solid cylinder

Description:

The vernier caliper consists of a main scale and is graduated in millimeters on one edge and inches on the other edge. A jaw is fixed at one end of the scale. A movable jaw carrying the vernier scale sliding over the main scale. When the two jaws are in contact, the zero of the vernier coincides with the zero of the main scale.

Formula:

Volume of the solid cylinder $\boxed{V=\pi R^2 L}$ m^3

Where L – Length of the solid cylinder

R – Radius of the solid cylinder

Pre experiment questions:

1. What is vernier caliper?
2. What is least count?
3. What are the two types of error in vernier caliper?

Procedure:

- Least count

The value of one main scale division (1M.S.D) and the number of vernier scale divisions are found and the least count is determined using the formula.

$$\text{Least count} = \frac{1}{n} \times \text{value of 1 M.S.D}$$

Zero error and zero correction:

When the two jaws are in contact

- If the zero the vernier scale coincides with the zero of the main scale, then there is no zero error.
- If the zero of the vernier scale lies on the right side of the zero of the main scale, the error is +ve and the correction is –ve.
- If the zero of the vernier scale lies on the left side of the zero of the main scale, the error is –ve and the correction is +ve.

Volume of the solid cylinder:

- The solid cylinder is placed in between the two jaws.
- The main scale reading (M.S.R) which is just in front of the vernier scale zero and the vernier scale coincidence (V.S.C) which the vernier division coincides with the zero of the main scale divisions are noted.
- Then the observed reading (O.R) and the correct reading (C.R) are calculated using the formula.

$$\mathrm{O.R.} = \mathrm{M.S.R} + (\mathrm{V.S.C} \times \mathrm{L.C.})$$

$$\mathrm{C.R.} = \mathrm{O.R} \pm \mathrm{Z.C}$$

- The experiment is repeated for a different position of the cylinder and the average length (L) is calculated.
- Similarly the diameter is measured. From this the radius (R) is calculated.
- The volume is calculated using the formula.

$$\text{Volume of the solid cylinder} = \pi R^2 L \ \ m^3$$

Result:

Volume of the solid cylinder = …….. m^3

Post experiment questions:

1. What is the use of upper jaws and lower jaws of the vernier caliper?
2. How can you find the least count of vernier?
3. What is positive error in vernier caliper?

Diagram:

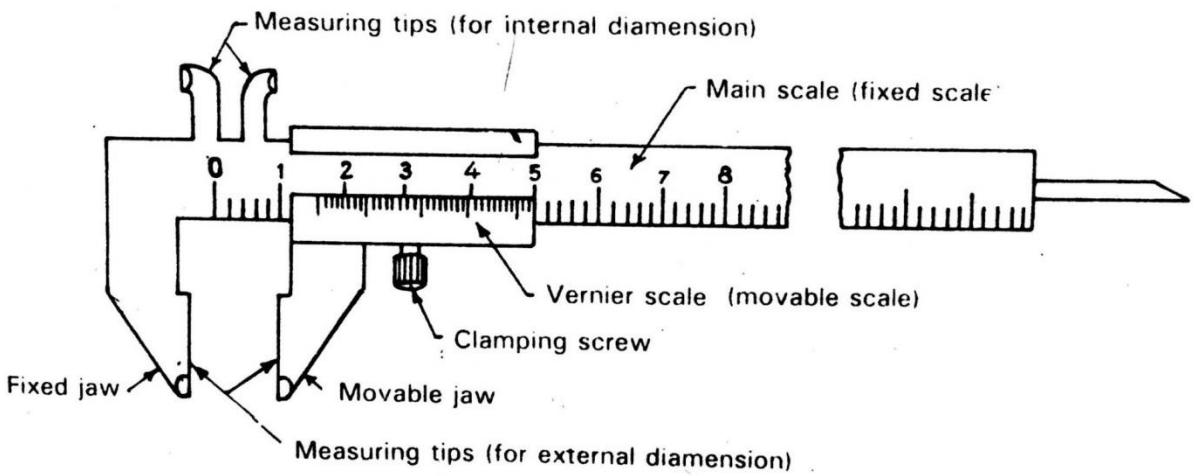

Observations:

Value of 1 main scale division (1 M.S.D) = 1 mm

No. of divisions in the vernier scale n = 50 div

Least Count = $\frac{1}{n} \times 1\ \mathrm{M.S.D}$

= 0.02 mm

Length of the Solid Cylinder:

L.C. = 0.02mm

S.No.	**M.S.R** **mm**	**V.S.C** **divisions**	**Observed Reading** **= M.S.R+(V.S.CxL.C)** **mm**	**Correct Reading** $\mathbf{C.R. = O.R \pm Z.C}$ **mm**
1				
2				
3				
4				
5				

Mean=

Diameter of the Solid Cylinder:

L.C. = 0.02 mm

S.No.	M.S.R mm	V.S.C divisions	Observed Reading = M.S.R+(V.S.C x L.C) mm	Correct Reading C.R. = O.R ± Z.C mm
1				
2				
3				
4				
5				

Mean=

Calculation:

Length of the solid cylinder (L) = ……x10^{-3} m

Diameter of the solid cylinder (D) = ……x10^{-3} m

Radius of the solid cylinder (R) = ……x10^{-3} m

Volume of the solid cylinder = $\pi R^2 L$

= …….. x …… x ……

= …….. m^3

Expt. No : Date :	PARALLELOGRAM LAW OF FORCES

Aim:

To verify parallelogram law of forces.

Apparatus required:

Drawing board, Two pulleys with clamps, Three sets of slotted weights with hangers, Threads, Compass and Drawing paper.

Description:

The frictionless pulleys are fixed at the two top corners of a vertical drawing board. A light string is passed over the two pulleys and two weight hangers P and Q are tied at the ends. The third weight hanger R is suspended with another string at some point 'O' with the first string.

Formula:

Resultant = Equilibrant (i.e) OD = OC

$\angle COD = 180^0$

Pre experiment questions:

1. What is resultant?
2. What is equilibrant?
3. What is the resultant of two forces P and Q if they are i) like parallel and ii) unlike parallel forces?

Procedure:

- The three weights are adjusted such that the system is in equilibrium.
- The point 'O' and the directions OA, OB and OC are marked on the white paper by making dots.
- The dots are joined. With suitable scale the line segments OA, OB and OC are marked and the parallelogram OADB is completed.

- The length OD and ∠COD are measured.
- The values are tabulated and the experiment is repeated for different values of P, Q and R.
- In the tabular column it is found that OC = OD and ∠COD = 180° for all cases.

Result:

Resultant = Equilibrant (ie) OD = OC and ∠COD = 180°

Hence parallelogram law of forces is verified.

Post experiment questions:

1. Distinguish concurrent forces and coplanar forces?
2. Distinguish parallelogram law of forces.
3. How can you find the resultant of two forces which are acting at a point with an acute angle between them.

Diagram:

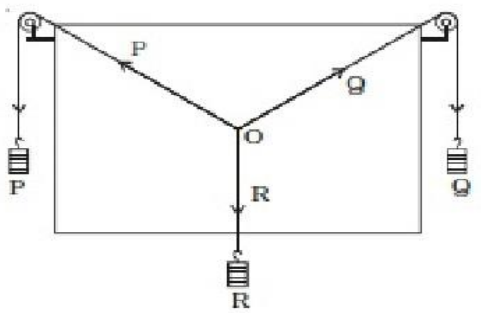

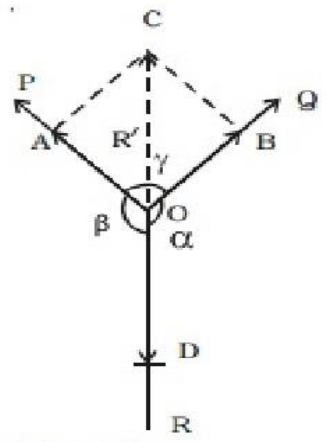

Observation:

Scale: 50 gm = 1cm

S.No	Forces (gmf)			Sides (cm)				∠COD
	P	Q	R	OA	OB	OC	OD	
1	300	300	300					
2	250	250	250					
3	200	200	200					

Calculation:

1) P =
Q =
R =
OC =
OD =

2) P =
Q =
R =
OC =
OD =

3) P =
Q =
R =
OC =
OD =

Expt. No : Date :	LAMI'S THEOREM

Aim:

To verify Lami's theorem.

Apparatus required:

Drawing board, Two pulleys with clamps, Three sets of slotted weights with hangers Thread, Protractor and Drawing paper

Description:

The frictionless pulleys are fixed at the two top corners of a vertical drawing board. A light string is passed over the two pulleys and two weight hangers P and Q are tied at the ends. The third weight hanger R is suspended with another string at some point 'O' with the first string.

Formula:

$$\boxed{\frac{P}{\sin\alpha} = \frac{Q}{\sin\beta} = \frac{R}{\sin\gamma}}$$

Where P, Q, R – forces

α, β, γ – angles between the forces

Pre experiment questions:

1. What are concurrent forces?
2. What are coplanar forces?
3. What is resultant?
4. What is equilibrant?

Procedure:

- The three weights are adjusted such that the system is in equilibrium.
- The point 'O' and the directions OA, OB and OC are marked on the white paper by making dots. The dots are joined.
- The angles α, β and γ are measured using the protractor.
- Then $\frac{P}{\sin\alpha}$, $\frac{Q}{\sin\beta}$, $\frac{R}{\sin\gamma}$ are calculated and tabulated.
- The experiment is repeated for different values of P, Q and R.
- In the tabular column it is found that $\frac{P}{\sin\alpha} = \frac{Q}{\sin\beta} = \frac{R}{\sin\gamma}$ for all cases.

Result:

$$\frac{P}{\sin\alpha} = \frac{Q}{\sin\beta} = \frac{R}{\sin\gamma}$$

Hence Lami' theorem is verified.

Post experiment questions:

1. State Lami's theorem.
2. What are the limitations of Lami's theorem.
3. Is Lami's theorem is applicable for linear forces?

Diagram:

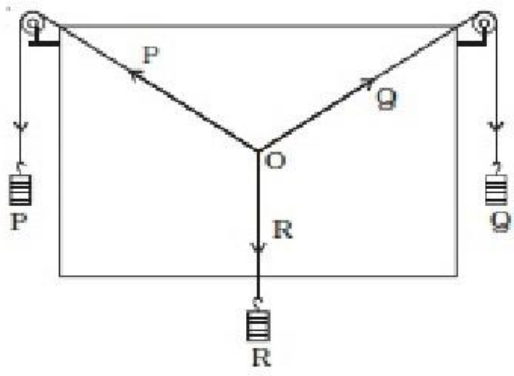

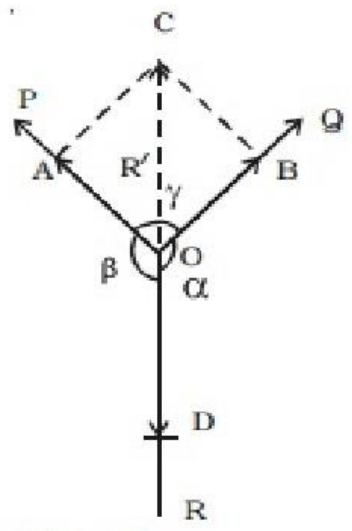

Observation:

S.No	Forces (gmf)			Angles			$\frac{P}{\sin\alpha}$	$\frac{Q}{\sin\beta}$	$\frac{R}{\sin\gamma}$
	P	Q	R	α	β	γ			
1	300	300	300						
2	250	250	250						
3	200	200	200						

Calculation:

1) $\frac{P}{\sin\alpha} =$

2) $\frac{Q}{\sin\beta} =$

3) $\frac{R}{\sin\gamma} =$

Expt. No : Date :	COMPARISON OF VISCOSITIES OF TWO LIQUIDS

Aim:

To compare the coefficient of viscosities of given two liquids.

Apparatus Required:

A burette, Capillary tube, A beaker, A stop clock, Clamp, Stands, Rubber tube and two liquids.

Description:

A capillary tube of a very fine bore is connected by means of a rubber tube to a burette kept vertically. The capillary tube is kept horizontal as shown in Figure. The burette is filled with water. As a fluid flows through a pipe, the layer of water in contact with the tube is acted on by frictional forces slowing it down. The time taken for the water level is noted.

Formula:

The ratio of the coefficient of viscosities of given two liquids

$$\frac{\eta_1}{\eta_2} = \frac{t_1}{t_2} \times \frac{\rho_1}{\rho_2}$$

Where,

t_1 is the time taken by the first liquid for a given range of flow.

t_2 is the time taken by the second liquid for the same range of flow.

ρ_1 is the density of the first liquid

ρ_2 is the density of the second liquid

Pre experiment questions:

1. What are viscous forces?
2. How viscous force arises between the layers of liquid.
3. What is the limit for viscosity?
4. What factors affect the quantity of liquid comes out per second through a capillary tube.

Procedure:

- A burette is cleaned well and fixed vertically by a stand.
- A capillary tube is held horizontally by another stand.
- The lower end of the burette is connected to the capillary tube.
- One of the given liquids is poured into the burette.
- The burette is opened in such a way that the liquid comes out slowly as drop by drop through the capillary tube.
- The level of the liquid reaches zero marking of the burette.
- Then start a stop clock.
- Time is noted clearly when the level crosses 5,10,15,……, 35 cc.
- The second liquid is then poured into the burette without disturbing the whole arrangement.
- The time is noted when the level crosses 5,10,….., 35 cc as before.
- Let t_1 and t_2 be the time taken by the two liquids for the same range of flow.
- The readings are tabulated. The mean value of ratio t_1/t_2 is calculated from the tabular column.
- ρ_1 is the density of the first liquid and ρ_2 is the density of the second liquid.
- The ratio of the coefficient of viscosities of the given two liquids can be calculated by using the formula

$$\frac{\eta_1}{\eta_2} = \frac{t_1}{t_2} \times \frac{\rho_1}{\rho_2}$$

Result:

The ratio of the coefficient of viscosities of given two liquids $\frac{\eta_1}{\eta_2} =$ _____

Post experiment questions:

1. What is stream line flow?
2. What is turbulent flow?
3. What factors affect viscosity?

Diagram:

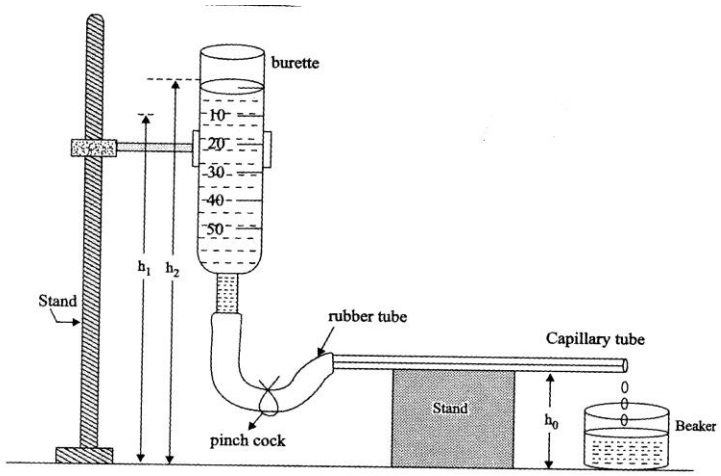

Observation:

Table - I

S. No.	Burette Reading Cc	Time of flow	
		liquid I t_1	Liquid II t_2
1.	0		
2.	5		
3.	10		
4.	15		
5.	20		
6.	25		
7.	30		
8.	35		

Table – II

S. No.	Burette Reading	Time of flow		$\frac{t_1}{t_2}$
		liquid I (t_1)	Liquid II (t_2)	
1.	0-5			
2.	5-10			
3.	10-15			
4.	15-20			
5.	20-25			
6.	25-30			
7.	30-35			

Mean $\frac{t_1}{t_2}$ = ……

Calculation:

The density of liquid I, ρ_1 = 1000 kg m^{-3}

The density of liquid II, ρ_2 = 830 kg m^{-3}

Mean value of $\frac{t_1}{t_2}$ =

The ratio of coefficient of viscosities of two liquids is

$$\frac{\eta_1}{\eta_2} = \frac{t_1}{t_2} \times \frac{\rho_1}{\rho_2}$$

= …… x ……

= …….

Expt. No : Date :	CO-EFFICIENT OF VISCOSITY – STOKE'S FORMULA

Aim:

To determine the co-efficient of viscosity of a high viscous liquid (castor oil) by Stoke's method.

Apparatus Required:

A tall glass jar, Small metal balls, A stop watch, Screw gauge, Castor oil.

Description:

The pure, transparent, highly viscous liquid (castor oil) is taken in the tall glass jar. On the outer surface of the jar, two markings B and C or C and D are made at a particular distance. The marking B should be well below the free surface of the liquid. Then only the sphere can attain terminal velocity when travelling from B to C or C to D.

Formula:

The Co-efficient of viscosity of highly viscous liquid

$$\eta = \frac{2(r^2 t)}{9h}(\rho - \sigma)g \qquad Nsm^{-2}$$

where, r --------→ Radius of the ball

t --------→ Time taken

h --------→ Distance travelled

ρ --------→ Density of the ball

σ --------→ Density of the liquid

g --------→ Acceleration due to gravity

Pre experiment questions:

1. What is coefficient of viscosity?
2. How viscous force arises between the layers of liquid?
3. What is stoke's formula?
4. What is viscous force?

Procedure:

- The castor oil is taken in a tall glass jar.
- Two marks B and C are marked on the jar.
- The radii of the small metal balls are measured by using a screw gauge.
- A steel ball of radius 'r' is dropped gently on the surface of the liquid.
- The ball crosses the mark B, start a stop clock and stop the clock when it reaches the mark C.
- The time taken to cross the distance BC is noted.
- Repeat the experiment for the balls of different radii and the readings are tabulated.
- The coefficient of viscosity of the highly viscous liquid can be calculated by using the formula,

$$\eta = \frac{2(r^2 t)}{9h}(\rho - \sigma)g$$

Result:

The Co-efficient of viscosity of the high viscous liquid $\eta =$ _____Nsm^{-2}

Post experiment questions:

1. What is terminal velocity?
2. What is the use of high viscous liquids?
3. What factors affect viscosity?

Diagram:

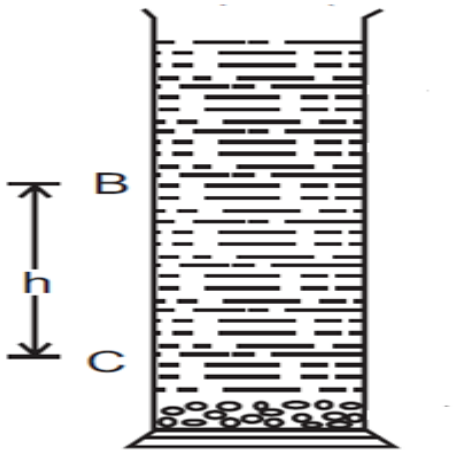

Observation:

L.C.= …….mm Z.E.= ……div. Z.C = ……div.

S.No.	**P.S.R** **mm**	**H.S.C** **divisions**	**C.H.S.C** **divisions**	**Correct Reading** **= P.S.R+(C.H.S.CxL.C)** **Mm**	**Radius of the ball** **R** **Mm**	**Mean** **Radius** **mm**
Ball-I 1 2 3						r_1=
Ball-II 1 2 3						r_2=
Ball-III 1 2 3						r_3=

S.No.	Radius r(mm)	r^2 mm^2	Time taken t (s)	r^2t mm^2s
Ball – I				
Ball – II				
Ball - III				

Mean r^2t =……. x $10^{-6}m^2s$

Calculation:

Density of the ball ρ = 7800 kg m^{-3}

Density of the liquid σ = 970 kg m^{-3}

Distance travelled h = 20 x 10^{-2} m

Mean r^2t = …… x 10^{-6} m^2s

Acceleration due to gravity g = 9.8 ms^{-2}

Co-efficient of viscosity of the highly viscous liquid

$$\eta = \frac{2(r^2t)}{9h}(\rho - \sigma)g$$

=

=

=

= _____ Nsm^{-2}

Expt. No : Date :	SONOMETER

Aim:

To determine the frequency of the given tuning fork

Apparatus Required:

Sonometer, Weight hanger with weights, Tuning fork, Paper rider.

Description:

The sonometer consists of thin wire kept stretched on a hollow wooden box. The wooden box is rectangular in shape and more than a metre in length. The wire is attached to a peg at one end of the wooden box.

The string passed over two fixed bridges P, R and a smooth aluminium pulley at the other end, and carries a weight hanger. The movable bridge Q is placed in between the fixed bridges. The tension of the string can be suitably adjusted by placing weights in the weight hanger. The movable bridge Q is used for adjusting the length of the vibrating segment of the wire.

Formula:

$$n = \frac{1}{2}\sqrt{\left(\frac{M}{l^2}\right)\frac{g}{m}}\ Hz$$

l = length of the vibrating segment

M = Total mass at the end of the wire

m = linear density of the wire

g = acceleration due to gravity

Pre experiment questions:

1. What is frequency?
2. What is free vibration?
3. What is forced vibration?
4. What are the types of waves?

Procedure:

- First of all the weight of the hanger is determined.
- A sufficient load is placed on the hanger tied to the sonometer wire.
- A paper rider is placed at the middle of the wire.
- The given tuning fork is excited gently by striking it with rubber hammer and is placed with its stem on the sonometer box.
- The length of the vibrating segment is adjusted until the paper rider on the wire flutters violently and is thrown away.
- The length of the vibrating segment 'l' is measured. This length is called resonating length.
- The load is then reduced in steps of 0.5 kg and in each case the resonating length is determined.
- Mass per unit length of the wire (m) can be found out by finding the weight of 1 metre length of the wire.
- The frequency of the tuning fork can be calculated using the above formula.

Result:

Frequency of the given tuning fork (n) = _____ Hz

Post experiment questions:

1. What is resonance in sonometer?
2. What are transverse waves?
3. How stationary wave pattern is formed in sonometer?

Diagram:

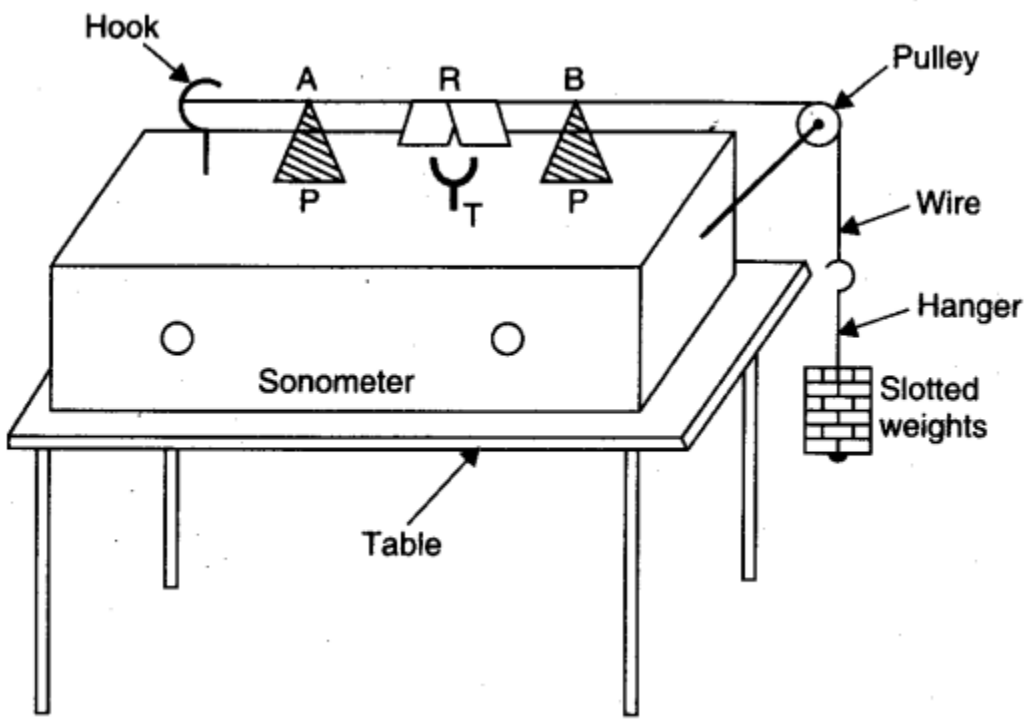

Observation:

S. No.	**Mass 'M' (kg)**	**Length of the vibrating segment 'l' (cm)**	**l^2**	$\frac{M}{l^2} \times 10^4\ kg/m^2$
1.				
2.				
3.				
4.				
5.				

Mean $\frac{M}{l^2} =$ _____ $kg\ m^{-2}$

Calculation:

Mean value of $\frac{M}{l^2}$ = _____ $kg\ m^{-2}$

Linear density m = _____ $kg\ m^{-1}$

Acceleration due to gravity g = 9.8 ms^{-2}

$$n = \frac{1}{2}\sqrt{\left(\frac{M}{l^2}\right)}\frac{g}{m}$$

Expt. No : Date :	DEFLECTION MAGNETOMETER

Aim:

To compare the magnetic moments of the given two bar magnets using a Deflection magnetometer- tanA position by equal distance method.

Apparatus Required:

Deflection magnetometer, two short bar magnets, metre scale

Description:

Deflection magnetometer consists of a small magnetic needle pivoted on a sharp support such that it is free to rotate in a horizontal plane. A light, thin, long aluminium pointer is fixed perpendicular to the magnetic needle. The pointer also rotates along with the needle.

There is a circular scale divided into four quadrants and each quadrant is graduated from 0° to 90°. A plane mirror fixed below the scale ensures, reading without parallax error, as the image of the pointer is made to coincide exactly with pointer itself. The needle, aluminium pointer and the scale are enclosed in a box with a glass top. There are two arms graduated in centimetre and their zeroes coincide at the centre of the magnetic needle.

Formula:

The ratio of the magnetic moments by equal distance method

$$\frac{M_1}{M_2} = \frac{\tan\theta_x}{\tan\theta_y}$$

θ_x = angle of deflection for the first magnet;

θ_y = angle of deflection for the second magnet;

M_1 = Magnetic moment of the first magnet

M_2 = Magnetic moment of the second magnet

Pre experiment questions:

1. What is magnetic line?
2. What is magnetic field?
3. What is pole strength of a bar magnet?
4. What will happen if two like poles are kept very close to each other?

Procedure:

Tan A position

- The arms of the magnetometer are placed to point approximately east and west.
- The rim of the magnetometer is adjusted such that the aluminum pointer is made parallel to the arms.
- The two ends of the aluminum pointer are made to read 0-0 by rotating the compass box alone.

Equal distance method

- The first magnet (*magnetic moment* M_1) is placed on one of the arms of the magnetometer with its axis parallel to the arms.
- The distance 'd' between the center of the magnet and the center of the compass box should be such that the deflection in the compass box is in the range of 30° to 60°.
- The readings of both the ends of the aluminium pointer are taken as θ_1 and θ_2.
- The magnet is reversed pole to pole at the same distance and the deflections are noted as θ_3 and θ_4 .
- The magnet is kept on the other arm at the same distance and the four deflections of the pointer θ_5, θ_6, θ_7 and θ_8 are noted.
- The average of these eight deflections is found as θ_x.

- The experiment is repeated with the second magnet (*magnetic moment* M_2) at the same distance 'd'.
- The average of the eight deflections for the second magnet is taken as θ_y.
- The ratio of the magnetic moments of the two given magnets is calculated using the relation and experiment is repeated for different distance.

Result:

The ratio of the magnetic moments of the two magnets by equal distance method =

Post experiment questions:

1. What is magnetic moment of a magnet?
2. Explain Tan-A and Tan-B position.
3. What are the uses of deflection magnetometer.

Diagram (Equal Distance method):

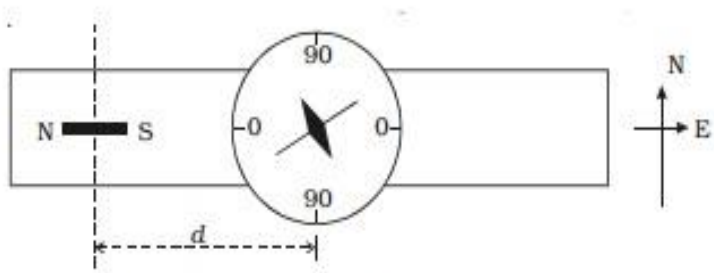

Observation:

	Deflection of the magnetometer																				
S. No.	**Distanced in cms**	**Deflection for I Magnet**									**Deflection for II Magnet**										$\frac{\tan\theta_x}{\tan\theta_y}$
		θ_1	θ_2	θ_3	θ_4	θ_5	θ_6	θ_7	θ_8	**Mean** θ_x	θ_1	θ_2	θ_3	θ_4	θ_5	θ_6	θ_7	θ_8	**Mean** θ_y		
1.																					
2.																					
3.																					
4.																					

Calculation:

Ratio of the magnetic moments $\frac{M_1}{M_2} = \frac{\tan\theta_x}{\tan\theta_y}$

1. $\frac{\tan\theta_x}{\tan\theta_y} =$

2. $\frac{\tan\theta_x}{\tan\theta_y} =$

3. $\frac{\tan\theta_x}{\tan\theta_y} =$

4. $\frac{\tan\theta_x}{\tan\theta_y} =$