VIRUDHUNAGAR S.VELLAICHAMY NADAR POLYTECHNIC COLLEGE
(Affiliated to Directorate of Technical Education, Chennai 600 025)
Virudhunagar - 626 001

MISSION

"Our Mission is to Produce Disciplined and Quality Technocrats through Academic Programme of Noted Excellence to Serve the Society"

VISION

"To be an Institute of Excellence in Technical Education and Training of individuals, Focusing on the needs of the Nation and Society in tune with Technological Developments"

COURSE MATERIAL	
SCHEME	**N1**
PROGRAMME	**Basic Engineering**
TERM	**II**
COURSE	**Engineering physics-II Practical**
PREPARED BY	**T.Jeyagopal** **V.Muthuvel**
VERIFIED BY	

DEPARTMENT OF BASIC ENGINEERING

List of Experiments

S.No	Date	Title of the experiment	Marks	Sign (With Date)
1.		Refractive Index -Travelling Microscope		
2.		Spectrometer – Angle Of Prism		
3.		Solar Cell V – I Characteristics		
4.		Laws Of Resistances (Ohm's Law)		
5.		Joule's Calorimeter		
6.		Copper Voltameter		
7.		PN – Junction Diode		
8.		Logic Gates		

Expt. No: Date :	**REFRACTIVE INDEX – Travelling Microscope**

Aim:

To determine the refractive index of a transparent liquid (water) using travelling microscope.

Apparatus Required:

Travelling microscope, Beaker with transparent liquid (water), Pin and Saw dust or chalk powder

Description:

A travelling microscope is an ordinary microscope fixed on a stand in such a way that it may be made to travel in vertical as well as horizontal direction without disturbing its adjusted focus. The readings are recorded by means of main scale and vernier scale of high accuracy attached to the instrument.

Formula:

The refractive index of a given liquid (water) $\mu = \frac{\text{Real depth}}{\text{Apparent depth}} = \frac{R_3 - R_1}{R_3 - R_2}$

Where

R_1 – image reading without water.

R_2 – image reading with water

R_3 – image reading of the saw dust

Pre experiment questions:

1. What is refraction?
2. Define refractive index of a medium.
3. What is least count of travelling microscope?

Diagram:

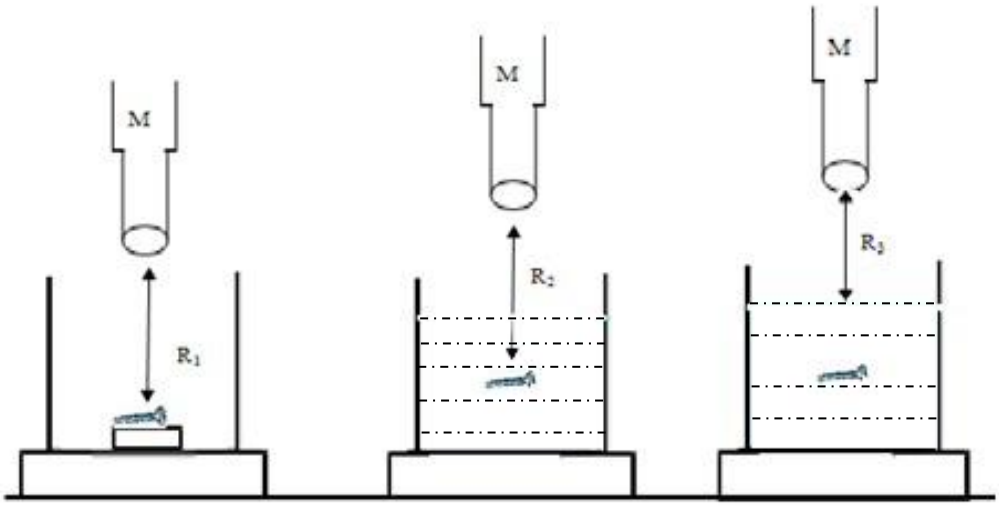

Least count: (Travelling microscope)

Least count = $\frac{1}{n} \times value\ of\ 1MSD$

Value of 1 MSD = …0.05 cm

No. of divisions of the vernier scale (n) = …50…

Least count (LC) = 0.001 cm

Observation: **CR = MSR+ (VSC x LC)**

S.No.	Microscope Reading									R_3-R_1 cm	R_3-R_2 Cm	$\frac{R_3 - R_1}{R_3 - R_2}$
	R1			R2			R3					
	MSR Cm	VSC Div	CR cm	MSR Cm	VSC Div	CR cm	MSR cm	VSC div	CR cm			
1.												
2.												
											Mean	

Procedure:

- A pin is placed inside a beaker and fixed in position to the bottom of the beaker with the help of small wax.
- The beaker is placed on the base and the microscope is focused on the pin.
- The Reading 'R_1' is taken.
- The given liquid poured to a sufficient height.
- The image of the pin is raised up. Now the microscope is focused on the image and reading 'R_2' is taken.
- The Saw dust is sprinkled over the liquid surface and is focused through microscope. Reading R_3 is taken.
- The refractive index of a given liquid (water) $\mu = \frac{Real\ depth}{Apparent\ depth}$

  $$= \frac{R_3 - R_1}{R_3 - R_2}$$

- The experiment is repeated for different depths of the liquid (water) and the mean value is determined.

Result:

The Refractive index of given liquid (water) = ……..

Post experiment questions:

1. How can you find the least count of travelling microscope?
2. What factors does the refractive index of a medium depend?
3. What is the importance of refractive index?

Calculation:

$$\mu = \frac{R_3 - R_1}{R_3 - R_2}$$

Diagram:

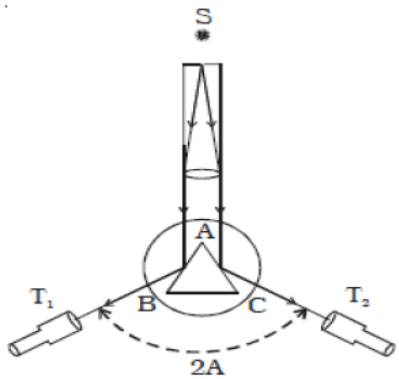

Least Count:

Least count $= \frac{1}{n} \times value\ of\ 1MSD$

Value of 1 MSD = $30'$

No. of vernier scale divisions (n) = 30

Least count (LC) = $1'$

Observations: Angle of prism (A): **CR= MSR + (VC × LC)**

Reflected Image	Spectrometer Reading						Difference (2A)		Mean 2A	A
	Vernier A			Vernier B			Ver A	Ver B		
	MSR	VC	CR	MSR	VC	CR				
From one face										
From other face										

Calculation:

2A = Reflected image reading from one face ~ Reflected image reading from other face

= ……..

= ……

Angle of Prism = 2A / 2

=

Expt. No: Date :	**Spectrometer – Angle Of Prism**

Aim:

To find the Angle of the glass prism using spectrometer.

Apparatus required:

Spectrometer, Glass prism, Reading lens, Light source.

Description:

The prism table is rotated in which the sharp edge of the prism is facing towards the collimator. Rotate the telescope in one direction up to which the reflected ray is shown through the telescope. The reading is taken in vernier A and vernier B.

Formula:

2A = Reflected image reading from one face ~ Reflected image reading from other face

Angle of Prism = 2A / 2

Pre experiment questions:

1. What is a prism?
2. What is the wave length range of visible light?
3. What is dispersion?
4. What is spectrometer?

Procedure:

Initial adjustments of the spectrometer:

- Using a sprit level the prism table is made perfectly horizontal by adjusting the leveling screws.
- The eyepiece of the telescope is adjusted so that the cross wires are seen clearly.
- The telescope is turned towards a distant object and adjusted to get a clear image of the distant object.
- The illuminated slit is viewed through the telescope and the distance between the slit and collimator lens is adjusted to obtain a clear image of the slit.

To find the angle of the prism (A):

- The least count of the vernier is determined.
- The prism is placed on the prism table.
- The telescope is turned to catch reflected image of the slit from one face of the prism.
- The telescope is fixed in that position and the tangent screw is worked so that the vertical cross wire coincides with the image.
- The readings in vernier A and vernier B are taken.
- Similary the readings of the verniers are taken when the cross wire coincides with the image reflected from the other face.
- The difference between the two readings of vernier A (=2A) and the two readings of vernier B(=2A) are found separately.
- From the observation the mean angle of the prism A is calculated.

Result:

Angle of the glass prism, A = ……

Post experiment questions:

1. What are the main parts of a spectrometer?
2. What is the use of radial screw and tangential screw in a spectrometer?
3. How can you find the least count of a spectrometer.

Diagram:

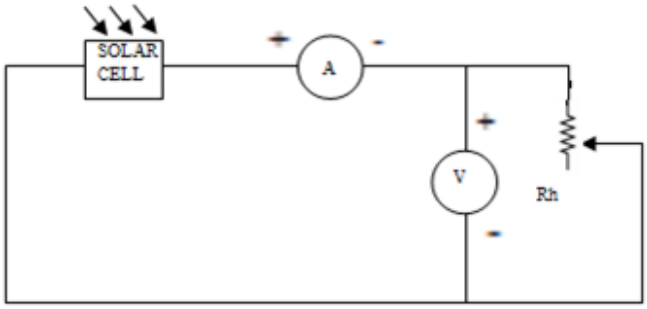

V-I Characteristics curve:

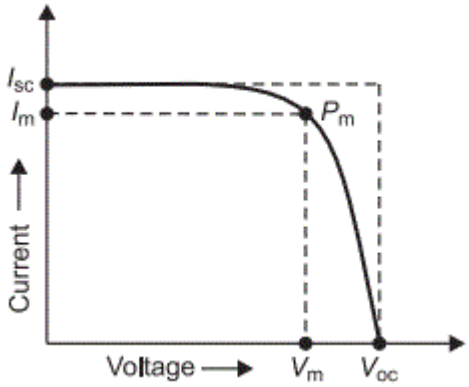

Observation:

S.No	Voltmeter Reading (Volt)	Ammeter Reding (mA)

Calculation:

Maximum power = Maximum voltage × Maximum current

Expt.No: Date :	SOLAR CELL V – I CHARACTERISTICS

Aim:

To draw the V- I Characteristics of a solar cell.

Apparatus required:

Solar Cell, Voltmeter, Ammeter and Rheostat

Description:

Solar cell converts light energy in to electrical energy. A solar cell is basically a p-n junction diode. It utilizes photovoltaic effect to convert light energy to electrical energy.

Formula:

Maximum power = Maximum voltage × Maximum current

Pre experiment questions:

1. What do you meant by solar cell?
2. What are the benefits of solar energy?
3. What is the principle of solar cell
4. What are the types of solar cells?

Procedure:

- Connections are made as shown in the circuit diagram.
- Light is made to fall on the solar cell. If sun light is not available, a powerful bulb can be used to charge the solar cell.
- At first, the circuit is short circuited. The voltage and current are measured.
- The voltage will be zero and the current will be maximum.
- This current is called as the short circuit current (Is).
- A rheostat can be included in the circuit as shown in figure.
- By adjusting the rheostat, the voltage (V) can be varied and the corresponding current (I) in the circuit is measured.
- A graph between V and I is drawn.

- The rheostat is removed and the circuit is opened.
- The voltage is measured and the current will be zero.
- This voltage will be maximum and it is called as open circuit voltage.

Result:

The V-I characteristics of a solar cell is studied from the graph.

Post experiment questions:

1. Where are solar cells used?
2. How do solar cells work?

Diagram:

Series connection

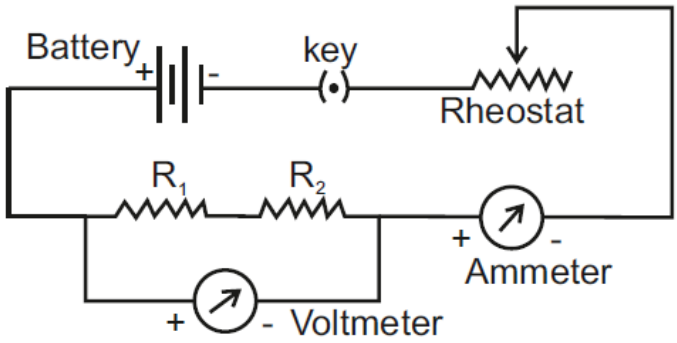

Observation:

R_1 = …… ohm

R_2 = …… ohm

$R_s = R_1 + R_2$

R_s =

S.No.	Ammeter reading (I) A	Voltmeter reading (E) volt	$R_S = \frac{E}{I} ohm$

Mean (R_s) =

Calculation:

Expt.No: Date :	LAWS OF RESISTANCES (OHM'S LAW)

Aim:

To determine the resistance of two given coils of wire using Ohm's law. Also verify the laws of resistance.

Apparatus Required:

A battery, Plug key, Rheostat, Resistance R_1 and R_2, Voltmeter, Ammeter, Connecting wires etc.,

Formula:

(i) When two resistances R_1 and R_2 are connected in series then the effective resistance.

$$R_s = R_1 + R_2 \text{ ohm}$$

(ii) When two resistances R_1 and R_2 are connected in parallel then the effective resistance.

$$R_p = \frac{R_1.R_2}{R_1+R_2} \text{ ohm}$$

Pre experiment questions:

1. State ohms law.
2. How electrical resistance is measured?
3. What causes electrical resistance?
4. Does temperature affect resistance?

Diagram:

Parallel connection

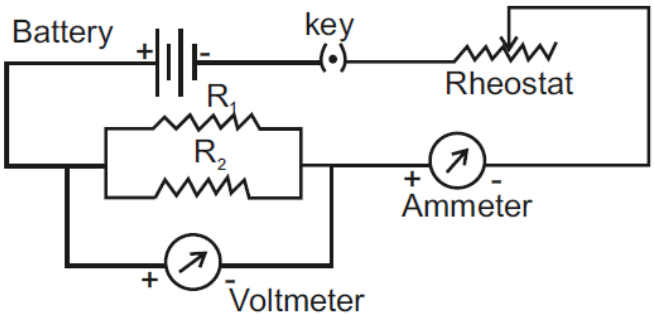

Observation:

R_1 = …… ohm R_2 = …… ohm

$$R_p = \frac{R_1 . R_2}{R_1 + R_2}$$

R_p =

S.No.	Ammeter reading (I) A	Voltmeter reading (E) volt	$R_p = \frac{E}{I} ohm$

Mean (R_p) =

Calculation:

Procedure:

- An ammeter, a rheostat, a battery, plug key and the resistance R_1 are connected in series.
- Connect a voltmeter parallel to the resistance R_1 so as to measure the potential developed across the resistance R_1.
- Close the plug key and adjust the rheostat to flow the small current and note the corresponding voltmeter readings the rheostat is adjusted for the flow current (I) from higher to lower values in steps of 0.1 amp and its corresponding voltmeter (E) readings are noted.
- Replace the resistance R_1 by R_2. Then R_1 and R_2 are connected in series and R1 and R_2 are connected in parallel.
- In each case note the current I and note the corresponding potential difference (E) in the voltmeter.
- Tabulate the ammeter readings and the voltmeter readings and calculate E/I value in each case which is equal to the resistance value connected in the circuit.
- Since we know E = IR, R = E / I. Then we found correct that the total resistance when R_1 and R_2 are connected in series is

$$R_s = R_1 + R_2$$

- The total resistance R_1 and R_2 are connected in parallel is

$$R_p = \frac{R_1.R_2}{R_1+R_2}$$

Result: The laws of resistance (i) Resistance in series $R_s = R_1 + R_2$

(ii) Resistances in parallel $\frac{1}{R_P} = \frac{1}{R_1} + \frac{1}{R_2}$ are verified

Post experiment questions:

1. State the laws of resistance?
2. What are the four factors that affect resistance?
3. How can you connect voltmeter and ammeter in a circuit?

Diagram:

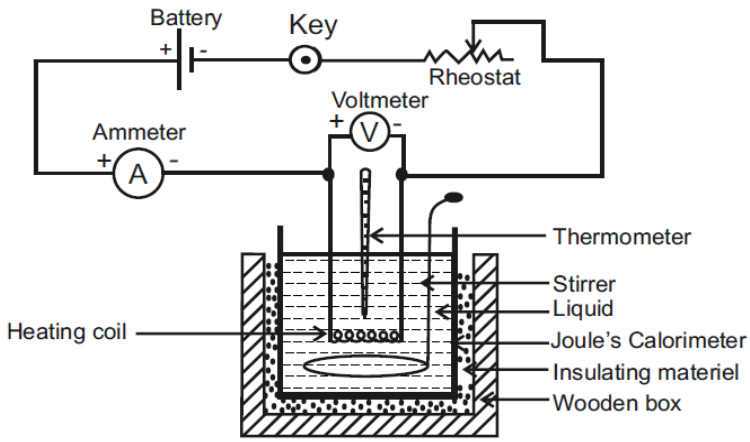

Calculation:

Mass of the calorimeter with stirrer(W_1) = …… × 10^{-3} kg

Mass of the calorimeter with stirrer + water(W_2) = …… × 10^{-3} kg

Mass of water ($W_2 - W_1$) = …… × 10^{-3} kg

Initial temperature t_1 = °C = K

Final temperature t_2 = °C = K

Time of flow of current t = 1200 sec

Voltmeter reading E = ……. volt

Ammeter reading I = …….. ampere

Specific heat capacity of the calorimeter $S =$ 917 $Jkg^{-1}K^{-1}$

Specific heat capacity of water

$$S = \frac{E\,It}{(W_2-W_1)(t_2-t_1)} - \frac{W_1 S}{(W_2-W_1)} Jkg^{-1}K^{-1}$$

=

=

= …….. $Jkg^{-1}K^{-1}$

Expt.No: Date :	JOULE'S CALORIMETER

Aim:

To determine the specific heat capacity of water using Joule's Calorimeter.

Apparatus Required:

Joule's calorimeter, Accumulators, key, Rheostat, Ammeter, Voltmeter, Sensitive Thermometer, Stop clock, Digital balance, Connecting wire, etc.

Description:

The Joule's Calorimeter consists of a copper (or aluminium) cylindrical vessel provided with stirrer. This is placed inside a wooden box. The space between the box and calorimeter is filled with non-conducting wool or cotton. The ends of the heating coil are connected to two binding screws fitted to an ebonite or wooden disc. This disc forms the lid of the calorimeter, such that, the heating coil remains inside the calorimeter. The disc has two holes one for insert the thermometer and the other to insert the stirrer.

Formula:

The specific heat capacity of water

$$S = \frac{E\,It}{(W_2 - W_1)(t_2 - t_1)} - \frac{W_1 s}{(W_2 - W_1)} Jkg^{-1}K^{-1}$$

Where E = Voltmeter reading

I = ammeter reading

t = time of flow of current

W_1 = mass of the calorimeter with stirrer

W_2 = mass of the calorimeter with stirrer + water

t_1 = initial temperature of water and calorimeter

t_2 = final temperature of water and calorimeter

s = specific heat capacity of the calorimeter

Pre experiment questions:

1. What does joules law state?
2. What is the difference between heat and temperature?
3. What is specific heat capacity?
4. Gases have two specific heat capacities - why?

Procedure:

- The Battery, Key, the rheostat and the ammeter are connected in series with the Joule's calorimeter coil.
- The voltmeter is connected in parallel in the coil.
- The calorimeter is taken out.
- The mass of empty calorimeter with stirrer W_1 is found.
- About 2/3 of the calorimeter is filled with water and the mass of the calorimeter and water is found as W_2.
- The calorimeter is then placed in its position inside the wooden box.
- The coil is kept immersed inside the water.
- The thermometer is inserted in its hole. The circuit is closed.
- The rheostat is adjusted till the ammeter shows a current of 1 ampere. The circuit is opened.
- The water is stirred well gently.
- The initial steady temperature of the calorimeter and its contents is noted as t_1.
- Again the circuit is closed and the stop clock is started simultaneously.
- The ammeter reading I and the voltmeter reading E are noted.
- The water in the calorimeter is kept stirred gently and continuously.
- After 20 minutes the circuit is opened.
- The temperature rises a little more and when it stands steady, it is noted as the final temperature t_2.

- The specific heat capacity of the water S is found using the relation.
- The electrical energy "EIt" spent is utilized to heat the calorimeter and water.

$$E\ It = W_1 s(t_2 - t_1) + (W_2 - W_1)S(t_2 - t_1)$$

where s and S are the specific heat capacities of the material of the calorimeter and the liquid respectively.

(Sp. heat capacity of copper is 385 J/kg/k and Aluminium is 917J/kg/k)

$$S = \frac{E\ It}{(W_2 - W_1)(t_2 - t_1)} - \frac{W_1 S}{(W_2 - W_1)} JKg^{-1}K^{-1}$$

Result:

Specific heat capacity of water (S) = …….. $JKg^{-1}K^{-1}$

Post experiment questions:

1. W hat is the principle of calorimetry?
2. Why is calorimeter made of copper or aluminium?
3. Why calorimeter is kept inside a wooden box?

Diagram:

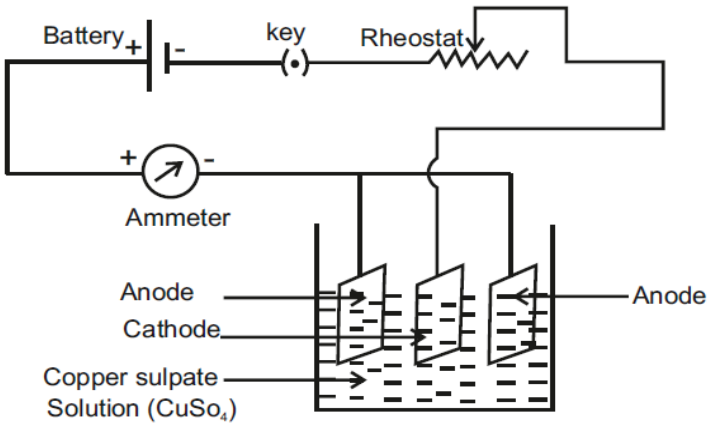

Observation:

Mass of Cathode before passing current (m_1)gm	Mass of Cathode after passing current (m_2)gm	Mass of Copper deposited $m = (m_2 - m_1)$gm

Ammeter Reading (I) amp	Time of flow of current (t) sec

Expt.No: Date :	COPPER VOLTAMETER

Aim:

To determine the electro chemical equivalent of copper (e.c.e) using copper voltameter.

Apparatus Required:

Copper voltameter, battery, ammeter, rheostat, key and connecting wires etc.

Description:

The copper voltameter consists of a cylindrical glass vessel provided with two electrodes namely anode and a cathode. These electrode's are kept in the electrolyte which is Copper Sulphate solution.

Formula:

Electro Chemical Equivalent of Copper, $Z = \frac{m}{It}$ KgC^{-1}

Where

m = mass of the copper deposited

I = current

t = time for which current is passed.

Pre experiment questions:

1. What is an electrolyte?
2. What is electrolysis?
3. What is copper voltameter?
4. State faradays first law of electrolysis?
5. What will happen during electrolysis?

Calculation:

Mass of copper deposited (m) = …… gm

= …… × 10^{-3} kg

Ammeter reading (I) = …… amp

Time of flow of current (t) = …… sec

∴The electro chemical equivalent of copper $z = \frac{m}{It}$ KgC^{-1}

=

=

=

= …… KgC^{-1}

Procedure:

- The copper voltameter is connected in series with a battery, key, rheostat and an ammeter.
- The circuit is closed and the rheostat is quickly adjusted for one ampere current. The key is opened, the cathode plate is removed, washed, dried, cleaned with emery paper and weighed correct to a milligram ($m_1$kg)
- The cathode, plate is then replaced in the circuit and the key is closed simultaneously starting a stop clock.
- The ammeter reading (I) is noted.
- After 20 minutes the current is cut off and the exact time of passage of current (t) is recorded.
- The cathode plate is removed, washed gently in a stream of water and dried. The mass of the cathode correct to a milligram ($m_2$kg) is determined.
- Mass of the copper deposited m = ($m_2 - m_1$) gms is calculated.
- From the observations the electro chemical equivalent (e.c.e) of copper is calculated by using the formula $(Z) = \frac{m}{It} kg\ C^{-1}$

Result:

The electro chemical equivalent of copper $(Z) =$..... $kg\ C^{-1}$

Post experiment questions:

1. What are the uses of electrolysis?
2. What is e.c.e of an element?
3. Why are copper electrodes used in electrolysis?

Forward bias:

Diagram:

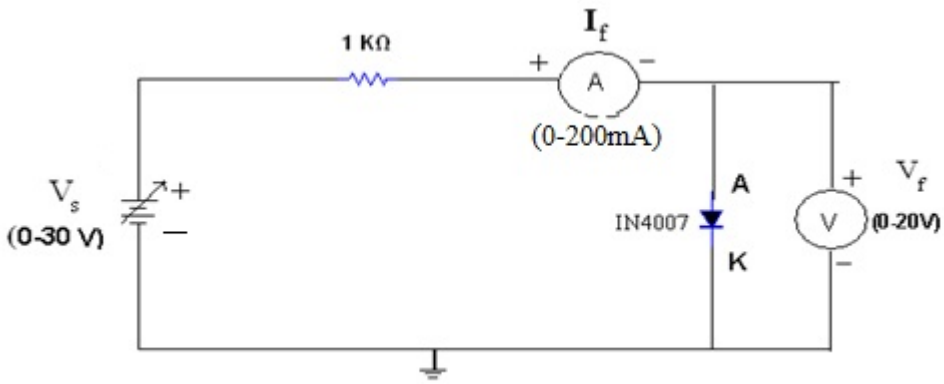

Observation:

S. No.	Forward Voltage V(Volts)	Forward Current I (mA)

Expt. No: **Date :**	**PN – JUNCTION DIODE**

Aim:

To draw V-I Characteristics of a PN – Junction Diode in forward bias and to find the 'dynamic forward resistance' & 'Knee voltage' from the graph.

Apparatus required:

P-N Junction Diode forward characteristics Kit.

Description:

The junction diode is said to connected in the forward bias when the negative terminal of the supply is connected to the cathode of the diode while the positive terminal is connected to the anode.This type of connection allow the electrons to move forward through the diode and complete the circuit when the voltage of the source is greater than the potential barrier of the diode. The amount of forward current that pass through the diode depends on the amount of forward voltage applied across the diode.

Formula:

$$\text{Forward resistance} = \frac{\Delta V_f}{\Delta I_f}$$

ΔV_f → Change in voltage

ΔI_f → Change in current

Pre experiment questions:

1. What are semiconductors?
2. What are intrinsic and extrinsic semiconductors?
3. What is P type semiconductor?
4. What is a P-N junction diode?
5. What is the use of a P-N junction diode?

V-I Characteristics Curve:

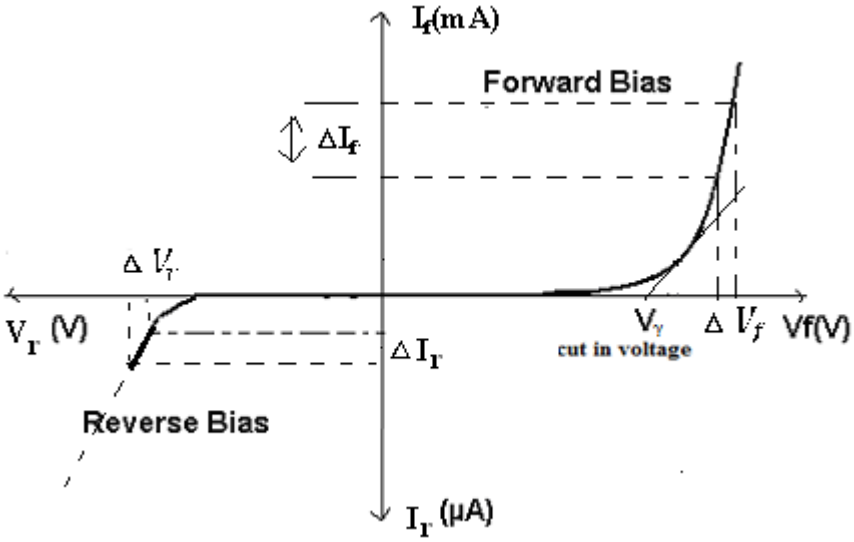

Calculation:

$$\text{Forward resistance} = \frac{\Delta V_f}{\Delta I_f}$$

Procedure:

- The anode of the given diode is connected to the positive of the battery and the cathode is connected to the negative.
- Key, Rheostat, Voltmeter and Milliammeter are connected as shown in the diagram.
- The circuit is closed by inserting the Key.
- A deflection is observed in the same direction in both the Voltmeter and the milliammeter.
- Then the circuit connections are correct.
- Now the rheostat is kept at one position.
- The voltmeter reading and corresponding milliammeter readings are noted.
- The rheostat is adjusted for different positions.
- The voltameter readings and the corresponding milliammeter readings are noted each time.
- A graph is drawn by taking the Voltmeter reading (forward conditions) along the positive x – axis and the corresponding milliammeter readings along the positive y – axis.
- We get a curve in the first quadrant.
- This graph gives the voltage characteristics of the diode in forward bias.
- From the curve we find that the diode current is very small for the first few tenths of a volt.
- The diode does not conduct well until the external voltage overcomes the barrrier Potential.
- The voltage at which the current start to increase rapidly is called the knee voltage (V_k) of the diode.
- Obtain the slope of the curve above V_k (knee voltage).
- The inverse of the slope gives the forward resistance of the diode.

Result:

The V.I characteristics curve of a diode in forward bias is drawn

Forward Resistance = ……..ohm

The knee voltage =……volt

Post experiment questions:

1. What is biasing in P-N junction?
2. What happens when P-N junction is reverse biased?
3. What is knee voltage of P-N junction diode?

Diagram:

OR Gate:

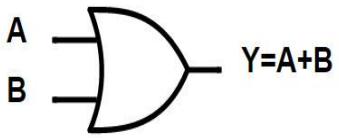

A	B	Y=A+B
0	0	0
0	1	1
1	0	1
1	1	1

AND Gate

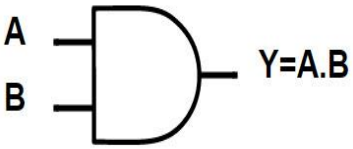

A	B	Y=A.B
0	0	0
0	1	0
1	0	0
1	1	1

NOT Gate

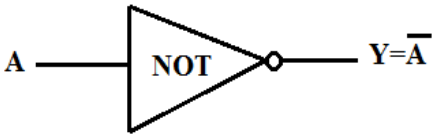

Input	Output
A	Y=$\overline{A}$
0	1
1	0

Expt. No: Date :	LOGIC GATES

Aim:

To study and verify the Truth Tables of AND, OR, NOT, NAND, NOR logic gates

Apparatus required:

Logic gates learner kit

Description:

A logic gate is an idealized or physical electronic device implementing a Boolean function, a logical operation performed on one or more binary inputs that produces a single binary output.

Formula:

OR GATE : $Y = A + B$ NOR GATE : $Y = \overline{A + B}$

AND GATE : $Y = A.B$ NAND GATE : $Y = \overline{A.B}$

NOT GATE : $Y = \overline{A}$

A, B = Inputs

Y = Outputs

Pre experiment questions:

1. What is logic gate?
2. What is truth table in logic gate?
3. What are the different types of logic gate?

NOR GATE:

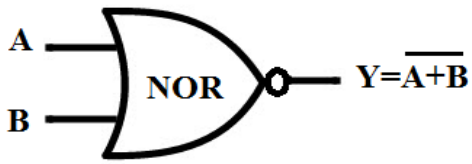

Inputs		Output
A	B	Y=$\overline{A+B}$
0	0	1
0	1	0
1	0	0
1	1	0

NAND GATE:

Inputs		Output
A	B	Y=$\overline{A.B}$
0	0	1
0	1	1
1	0	1
1	1	0

Procedure:

OR GATE:

- OR gate may have two or more inputs but only one output.
- The output assumes the logic 1 state, even if one of its inputs is in logic 1 state.
- Its output assumes logic 0 state, only when each one of its inputs is in logic 0 state.
- OR gate is also called an „any or all‟ gate. It can also be called an inclusive OR gate because it includes the condition „both the input can be present‟.
- Boolean expression for output can be written as; **Y = A + B**

AND GATE:

- AND gate has two or more inputs but only one output.
- The output assumes the logic 1 state only when each one of its inputs is at logic 1 state.
- The output assumes logic 0 state even if one of its input is at logic 0 state. AND gate is also called an „all or nothing‟ gate.
- Boolean expression for output can be written as; **Y = A.B**

NOT GATE:

- A NOT gate is also known an inverter, has only one input and only one output.
- It is a device whose output is always the complement of its input.
- That is the output of a not gate assumes the logic 1 state when its input is in logic 0 state and assumes the logic 0 state when its input is in logic 1 state.
- Boolean expression for output can be written as; $\mathbf{Y = \overline{A}}$

1. For IC's 7400 (NAND), 7408 (AND), 7432 (OR)

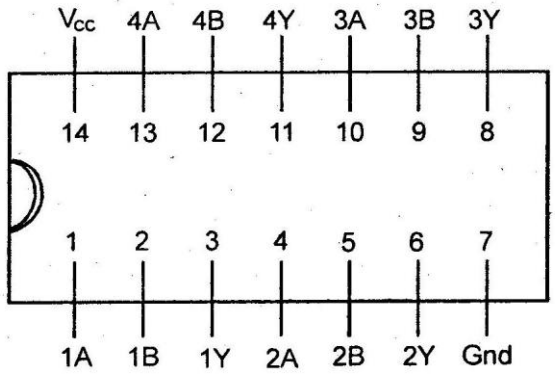

2. For IC 7402 (NOR)

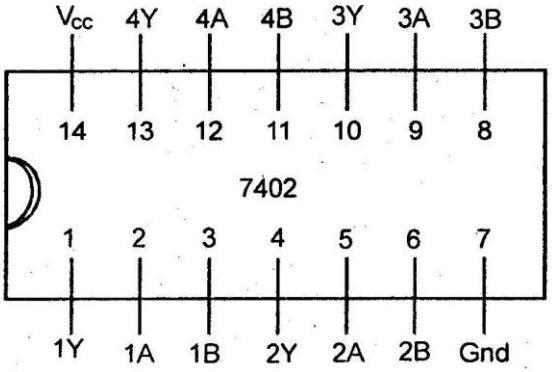

3. For IC 7404 (NOT)

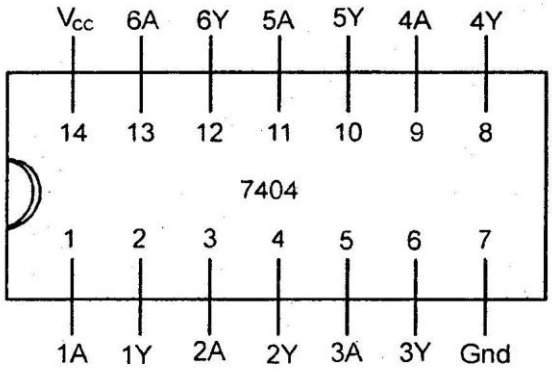

NAND GATE:

- NAND gate is universal gate.
- It can perform all the basic logic function.
- NAND means NOT AND that is, AND output is NOTed.
- NAND gate is combination of an AND gate and a NOT gate.
- The output is logic 0 level, only when each of its inputs assumes a logic 1 level.
- For any other combination of inputs, the output is logic 1 level.
- NAND gate is equivalent to a bubbled OR gate.
- Boolean expression for output can be written as; $\mathbf{Y = \overline{A.B}}$

NOR GATE:

- NOR gate is universal gate.
- It can perform all the basic logic function.
- NOR means NOT OR that is, OR output is NOTed.
- NOR gate is combination of an OR gate and a NOT gate.
- The output is logic 1 level, only when each of its inputs assumes a logic 0 level.
- For any other combination of inputs, the output is logic 0 level.
- NOR gate is equivalent to a bubbled AND gate.
- Boolean expression for output can be written as; $\mathbf{Y = \overline{A + B}}$

Result:

The truth tables for OR, AND, NOT, NAND, NOR GATES are verified using Ics

Post experiment questions:

1. Why is not gate called an inverter?
2. Which gates are called universal gates and why?
3. What are the Boolean equations for different type of logic gates?