VIRUDHUNAGAR S.VELLAICHAMY NADAR POLYTECHNIC COLLEGE
(Affiliated to Directorate of Technical Education, Chennai 600 025)
Virudhunagar - 626 001

MISSION

"Our mission is to produce disciplined and Quality Plastic technocrats through academic programme of noted excellence to serve the society"

VISION

"To be a department of excellence in Plastic Technology Education and Training of individuals focusing on the needs of the Nation and Society in tune with Technological Developments"

COURSE MATERIAL		
PROGRAMME	FIRST YEAR BASIC ENGINEERING	
SCHEME	N1 Scheme	
TERM	II Term	
COURSE CODE	N1BE202	
COURSE NAME	ENGINEERING DRAWING	
PREPARED BY	VERIFIED BY	APPROVED BY
B.PADMANABAN		

DEPARTMENT OF ENGINEERING GRAPHICS

ENGINEERING DRAWING - DETAILED SYLLABUS

UNIT-I PROJECTION POINTS, STRAIGHT LINES AND PLANES 18 Hrs

1.1 Projection of points

Projection of points – position of a point on four quadrants and on the reference planes – system of notation – Place a point on four quadrants with different distances – exercises (minimum 5 points).

1.2 Projection of straight lines and planes

Projection of straight lines – line in the first quadrant and on the reference planes – parallel to one plane and perpendicular to other plane – inclined to one plane and parallel to the other plane – parallel to both the planes – simple exercises.

Projection of planes – triangle, rectangle, hexagon and circle – plane parallel to HP and perpendicular to VP – plane parallel to VP and perpendicular to HP – plane perpendicular to both HP and VP – simple exercises.

UNIT-II PROJECTION OF SOLIDS AND SECTION OF SOLIDS 18Hrs

2.1 Projection of solids

Introduction – important terms – classification of solids – triangular, cube, pentagonal and hexagonal prisms and pyramids – solids of revolution – cylinder and cone – projection of solids in simple positions – axis parallel to one plane and perpendicular to other plane.

2.2.1 Projection of solids: position of solid – axis inclined to one plane and parallel to other plane – axis parallel to both planes – simple exercises.

2.2.2 Section of solids: Need for section view – cutting plane – cutting plane line – representation as per BIS code – Hatching line – true section – section of simple solids – prism, pyramid, cylinder, cone – position of solids – axis perpendicular to one plane and parallel to other plane – position of cutting planes – cutting plane perpendicular to one plane and parallel to another plane – cutting plane perpendicular to one plane and inclined to another plane – true shape – exercises.

UNIT-III DEVELOPMENT OF SURFACES 21Hrs

3.1 Need for preparing development drawing with reference to sheet metal work – procedure for preparing development drawing of prism, pyramid, cylinder and cone – exercises in rectangular, square and hexagonal prisms and pyramids – exercises in regular cylinder and cone.

3.2 Cutting plane – cutting plane line – development of truncated prism, pyramid, cylinder and cone – frustum of pyramid and cone – development of simple components such as elbow, ducts, lamp shade and funnel.

UNIT-IV MISSING VIEWS AND ISOMETRIC PROJECTIONS 21Hrs

4.1 Missing views: Reading a drawing – missing views – visualization – possible view problems – Drawing a missing view or third view – simple exercises.

4.2 Isometric projections: Introduction – isometric view – isometric projection – methods of drawing an isometric view – box method – construction of arcs and circles – four centre method for drawing ellipse – construction of isometric drawing of components from the given orthographic views – simple exercises.

Text Books:

1. Bhatt N.D.and Panchal V.M.,"Engineering Drawing",CharotarPublishing House,50thEdn, 2010.
2. Gill P.S., "Engineering drawing", S.K.Kataria & Sons, 11th Edition, 2012.

Reference Books:

1. Gopalakrishna.K.R., "Engineering Drawing", (Vol.I and II combined), Subhas Publications, 2014.
2. Venugopal.K, PrabhuRaja.V, "Engineering Graphics", NewAge International Publishers, 11th Edn, 2011.
3. Nataraajan K V "A Text Book of Engineering Drawing and Graphics"

UNIT-I PROJECTION POINTS, STRAIGHT LINES AND PLANES

1.1 Projection of points

An element which has no dimensions, it can be situated in the following positions with respect to principal planes of the projections.

1.1.a) Quadrant system:

The picture planes used for obtaining the orthographic projections are called the Principal planes of projection or reference planes or co- ordinate planes of projection.

Note: The planes HP and VP are called **Principal Planes.**

VP: The plane in front of observer is the vertical plane. (VP) or it is also called a Frontal plane.

Front View (FV): The projection on the VP is called the Front View (FV) or Vertical Projection or front elevation or Elevation.

HP: The plane which is Horizontal and perpendicular to VP is Horizontal Plane.

Top View (TV): The projection on the HP is called the Top View (TV) or Horizontal Projection or Plan.

Reference Line: The line of intersection of HP and VP is called reference line, which is denoted by X-Y.

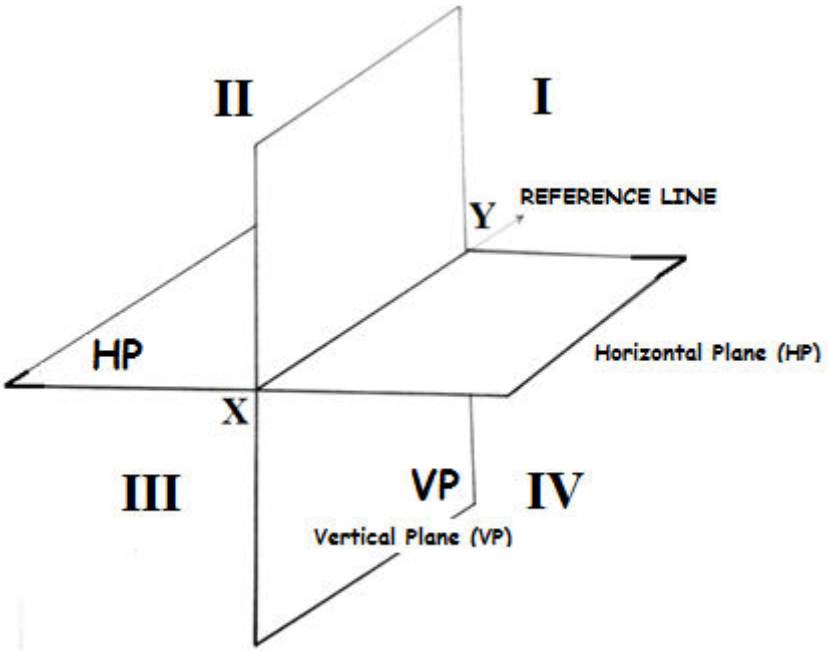

Points in Space

A point may lie in space in anyone of the four quadrants. The positions of a point are:

1. ***First quadrant, when it lies above H.P and in front of V.P.***
2. ***Second quadrant, when it lies above HP and behind V.P.***
3. ***Third quadrant, when it lies below H.P and behind V.P.***
4. ***Fourth quadrant, when it lies below H.P and in front of V.P.***

<u>Notation followed</u>

1. ***Actual points in space are denoted by capital letters A, B, C.***
2. ***Their front views are denoted by their corresponding lower case letters with dashes a', b', c' etc., and their top views by the lower case letters a, b, c etc.***
3. ***Projectors are always drawn as continuous thin lines.***

1.1.b) General procedure to draw projection of points

1. From given data identify the quadrant

2. Draw the **XY** line and projection

3. Along this projector mark by dots the distances of the given point form the HP and VP, on the corresponding side of the **XY** line, depending upon the quadrant in which the point lies, to locate the front view and the top view, respectively.

4. Make the front view and the top view bold and rub off the unwanted length of the projector to complete the solution.

Problem:

Point A is 40 mm above HP and 60 mm in front of V.P. Draw its front and top view.

Solution:

1. The **point - A** lies in the **I Quadrant**.
2. Looking from the front, the point lies 40 mm above H.P. **A- a'** is the projector perpendicular to V.P. Hence **a'** is the front view of the point A and it is 40 mm above the **XY** line.
3. To obtain the top view of A, look from the top. Point A is 60mm in front of V.P. **A - a** is the projector perpendicular to H.P Hence, **a** is the top view of the point A and it is 60 mm in front of **XY**.
4. To convert the projections **a' and a** obtained in the pictorial view into orthographic projections the following steps are needed.

   (a) Rotate the H.P about the **XY** line through 90° in the clock wise direction as shown

   (b) After rotation, the first quadrant is opened out and the H.P occupies the position vertically below the V.P line. Also, the point **a** on H.P will trace a quadrant of a circle with '**O'** as centre and '**O – a'** as radius. Now **a** occupies the position just below O. The line joining **a'** and **a**, called the projector, is perpendicular to **XY** (Fig.5.9b).

5. To draw the orthographic projections.

   (a) Front view : Draw the **XY** line and draw a projector at any point on it. Mark **a'** 40mm above **XY** on the projector.

   (b) Top view: on the same projector, mark **a** 60 mm below **XY**. (Fig.5 .9c)

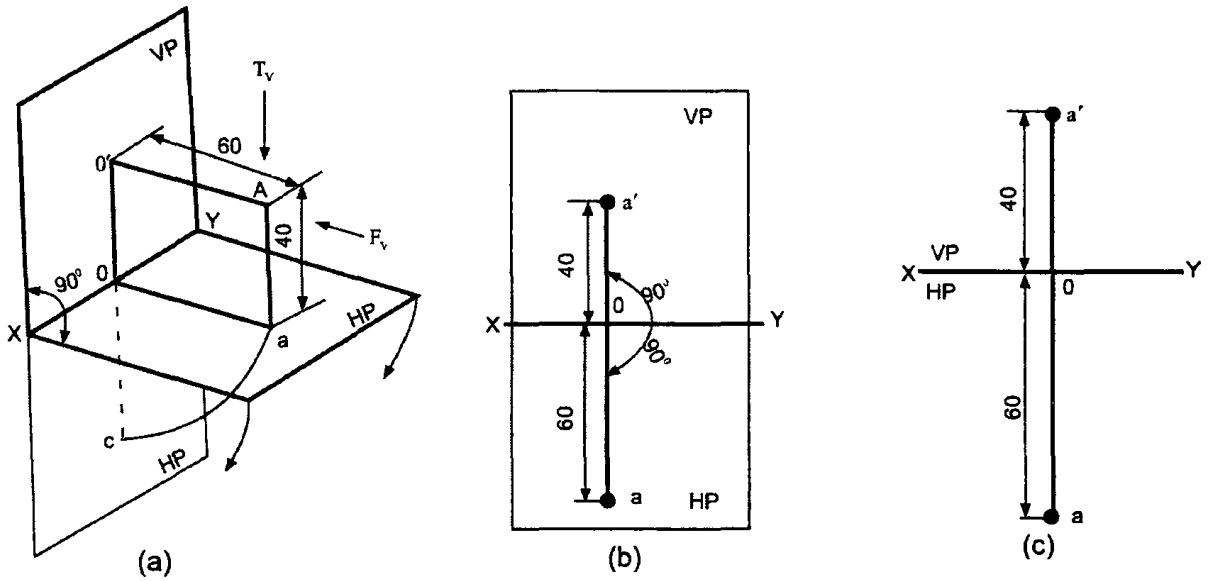

Problem : 1

Draw the projections of a point A lying on HP and 25mm in front of V.P.

Solution: **(Fig.5.10)**

1. Point A is lying on H.P and so its front view **a'** lies on **XY** line in Fig.5.1(a). Therefore, mark a line **XY** in the orthographic projection and mark on it **a'** (Fig.5.1 (b)).

2. Point **A** is 25mm in front of V.P and its top view **a** lies on H.P itself and in front of **XY**.

3. Rotate the H.P through 90° in clock wise direction, the top view of the point **a** now comes vertically below **a'** .

4. In the orthographic projection **a** is 25 mm below **XY**on the projector drawn from **a'**

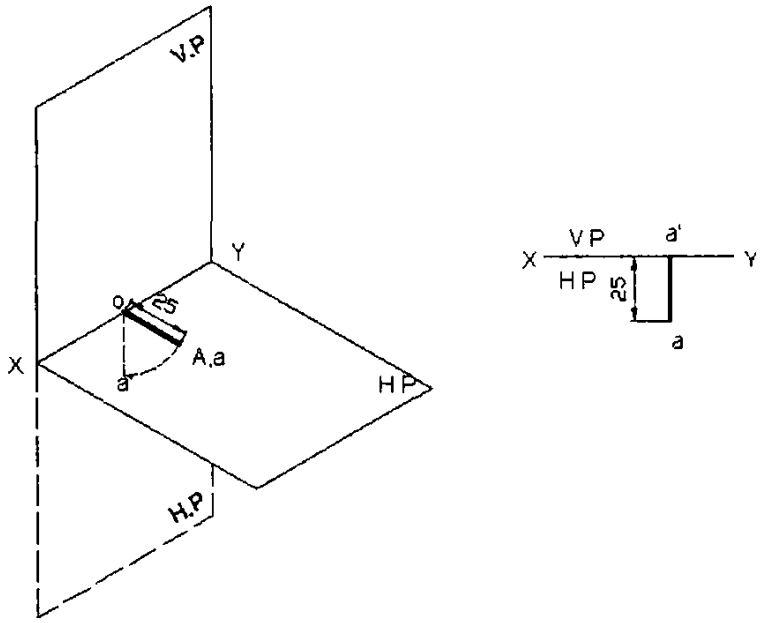

Problem: 2

Draw the projections of a point A lying on v.p and 70 mm above HP.

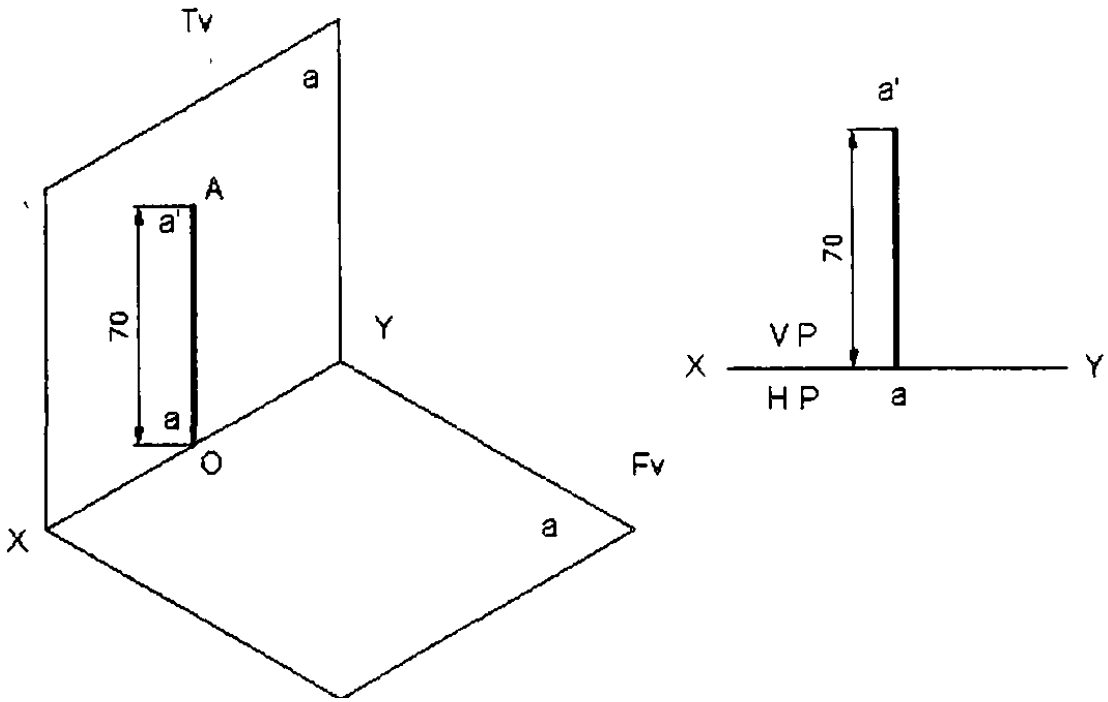

Problem : 3

A Point B is 30 mm above HP and 40 mm behind V.P. Draw its projection.

Solution: **(Fig.5.I2) The point B lies in the IT Quadrant**

1. It is 30 mm above H.P and **b'** is the front view of B and is 30 mm above **XY**.

2. Point B is 40 mm behind V.P. and **b** is the top view of B which is 40 mm behind **XY**.

3. To obtain the orthographic projections from the pictorial view rotate H.P by 90° about **XY** as shown in **Fig.5.12a**. Now the H.P coincides with V.P and both the front view and top view are now seen above **XY**. **b** on the H.P will trace a quadrant of a circle with **O** as centre and **Ob** as radius. Now **b** occupies the position above O.

4. To draw the orthographic projections; draw **XY** line on which a projector is drawn at any point. Mark on it **b'** 30 mm above **XY** on this projector.

5. Mark b 40 mm above **XY** on the same projector.

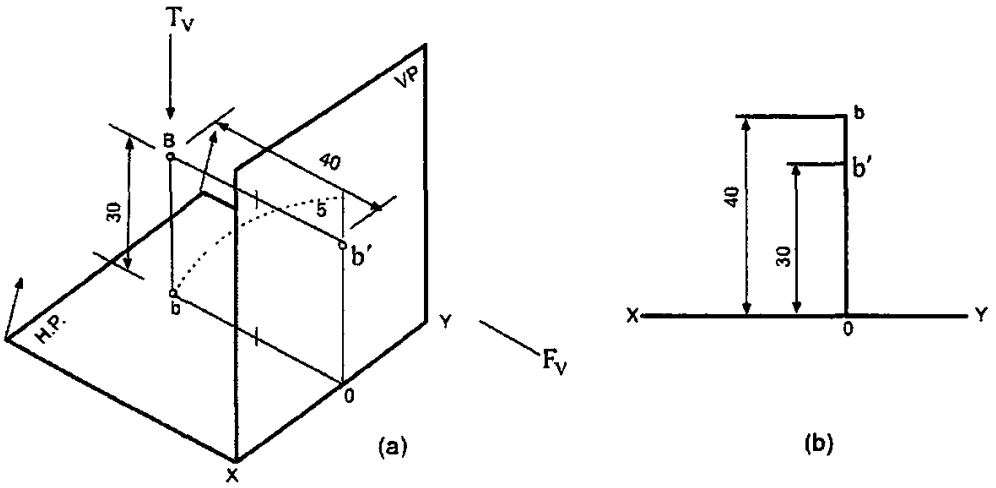

Fig. 5.12 Point in II Quadrant

Problem : 4

A point* C *is 40 mm below HP and 30 mm behind V.P. Draw its projections.

Solution : (Fig.5.13) The point C is in the III Quadrant

1. **C** is 40 mm below H.P Hence **c'** is 40 mm below **XY**.

2. Draw **XY** and draw projector at any point on it. Mark **c'** 40 mm below **XY** on the projector.

3. **C** is 30 mm behind **V.P**. So **c'** is 30 mm behind **XY**. Hence in the orthographic projections mark **c** 30 mm above **XY** on the above projector.

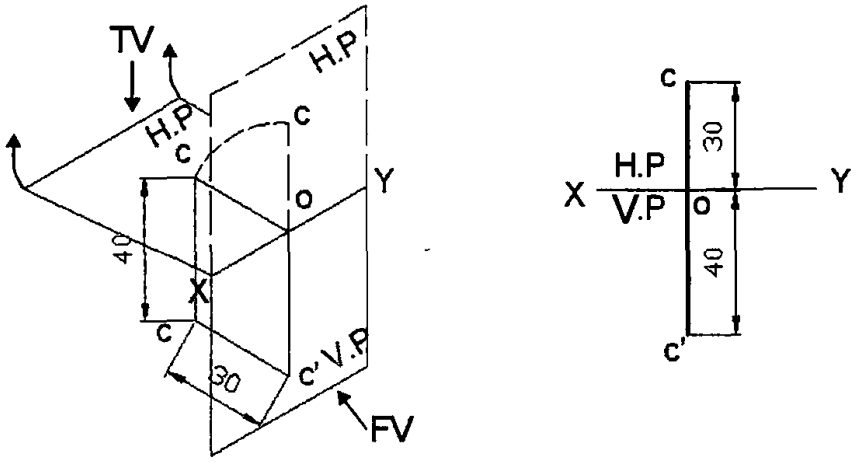

Fig. 5.13 Point in III Quadrant

Problem: 5

A point D is 30 mm below HP and 40 mm in front of V.P. Draw its projection.

Solution: (F ig.5 .14) The point D is in the IV Quadrant.

1. D is 30 mm below H.P. Hence, **d'**, is 30 **mm** below **XY**. Draw **XY** line and draw a projector perpendicular to it. Mark **d'** 30 **mm** below **XY** on the projector.

2. D is 40**mm** in front of V.P; so **d** is 40 **mm** in front of **XY**. Therefore, mark d 40 mm below **XY**.

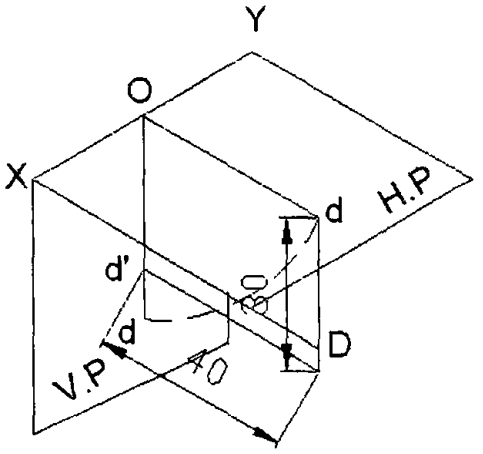

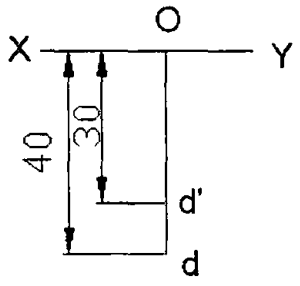

Problem:6

Draw the orthographic projections of the following points?

(a.) Point P is 30 mm. above H.P and 40 mm. in front of VP

(b.) Point Q is 25 mm. above H.P and 35 mm. behind VP

(c.) Point R is 32 mm. below H.P and 45 mm behind VP

(d.) Point Sis 35 mm. below H.P and 42 mm in front of VP

(e.) Point T is in H.P and 30 mm behind VP

(f.) Point U is in V.P and 40 mm. below HP

(g.) Point V is in V.P and 35 mm. above H.P

(h.) Point W is in H.P and 48 mm. in front of VP

Solution:

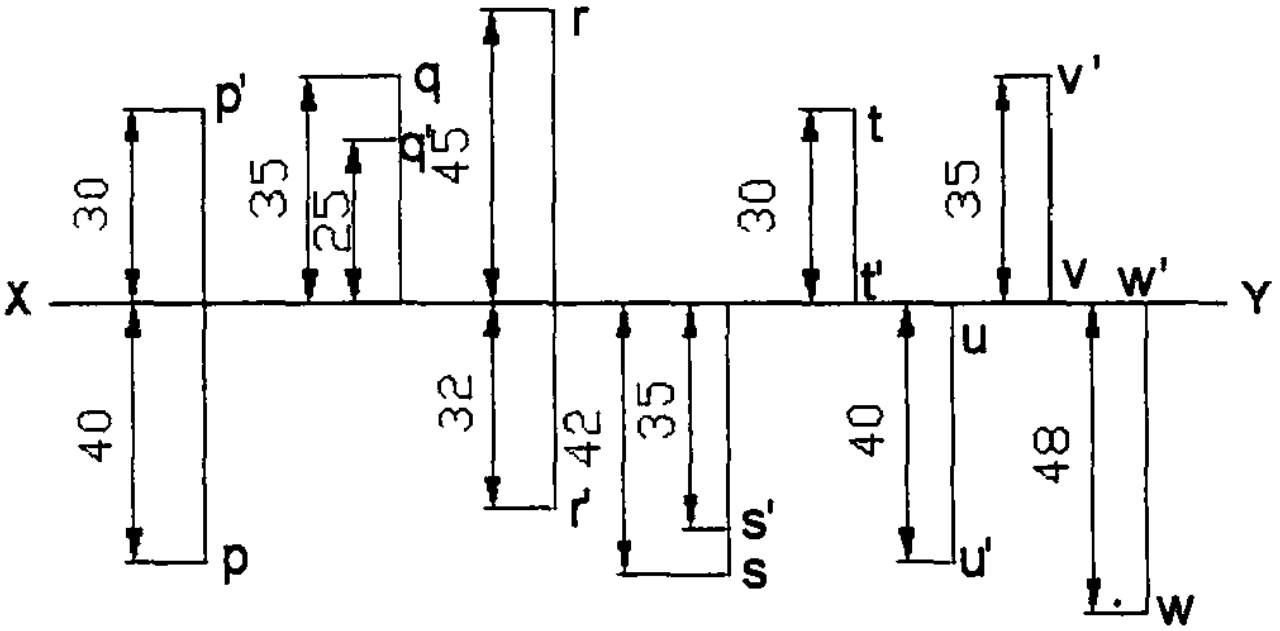

1.2 Projection of straight lines and planes

1.2.1 Introduction

The shortest distance between two points is called a straight line. The projectors of a straight line are drawn therefore by joining the projections of its end points. The possible projections of straight lines with respect to V.P and H.P in the first quadrant are as follows**:**

1. Perpendicular to one plane and parallel to the other.
2. Parallel to both the planes.
3. Parallel to one plane and inclined to the other.
4. Inclined to both the planes.

1. a. Line perpendicular to H.P and parallel to V.P

Problem:1

The pictorial view of a straight line AB in the First Quadrant, i.e the line AB = 25mm long is perpendicular to H.P & parallel to V.P, and the line AB is 20 mm infront of V.P and 10 mm above H.P as shown in Fig.5 .16 (a). Draw its projection.

1. Looking from the front; the front view of AB, which is parallel to **V.P** and marked, **a' b'**, is obtained. True length of AB = **a' b'**
2. Looking from the top; the top view of AB, which is perpendicular to H.P is obtained **a** and **b** coincide.
3. The Position of the line AB and its projections on H.P. and V.P are shown in Fig.5.l6b.
4. The H.P is rotated through 90° in clock wise direction as shown in Fig.5.16b.
5. The projection of the line on V.P which is the front view and the projection on H.P, the top view are shown in Fig.5.l6c.

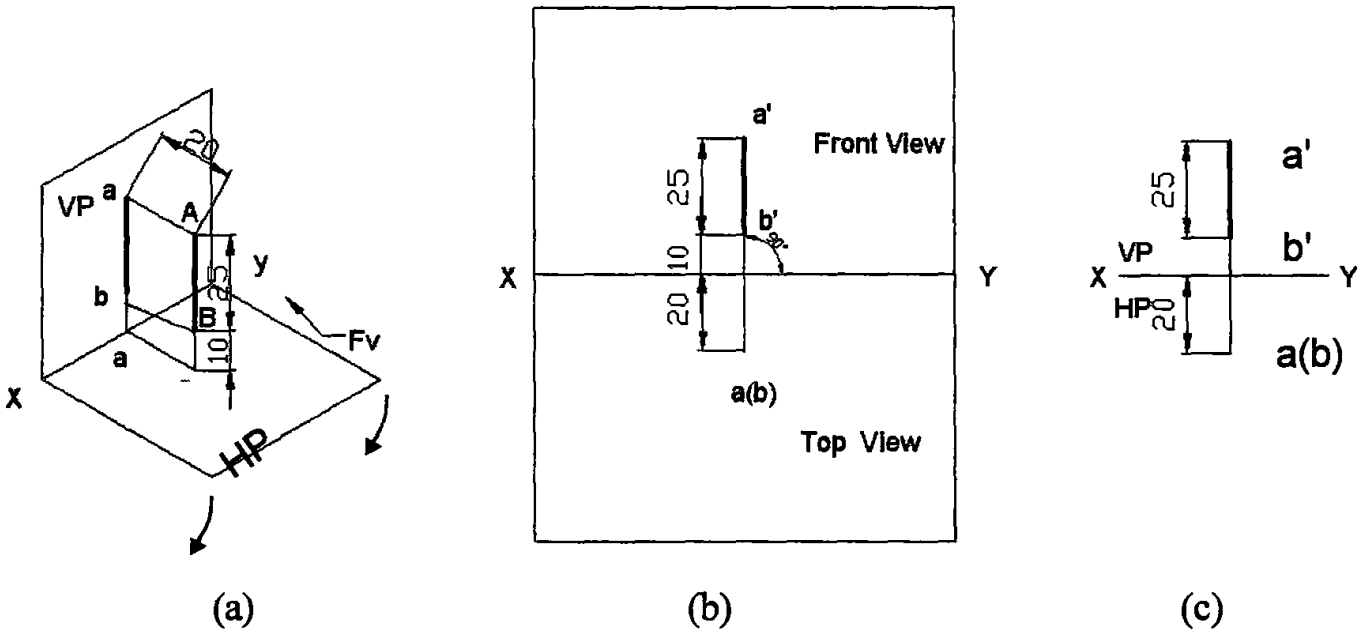

Fig. 5.16 Line perpendicular to H.P and parallel to V.P.

1. b. Line perpendicular to V.P and parallel to H.P.

Problem: 2

A line AB 50 mm long is perpendicular to V.P and parallel to HP. Its end A is 20 mm in front of V.P and the line is 40 mm above HP. Draw the projections of the line.

Solution **(Fig. 5.17) :**

Note : The line is parallel to H.P. Therefore the true length of the line is seen in the top view. So, top view is drawn first.

1. Draw **XY** line and draw a projector at any point on it.
2. Point **A** is 20 mm in front of V.P. Mark **a** which is the top view of **A** at a distance of 20 mm below **XY** on the projector.
3. Mark the point **b** on the same projector at a distance of 50 mm below **a. ab** is the top view which is true length of **AB.**
4. To obtain the front view; mark **b'** at a distance 40 mm above **XY** line on the same projector.
5. The line AB is perpendicular to V.P. So, the front view of the line will be **a** point. Point **A** is hidden by **B.** Hence the front view is marked as **b' (a'). B'** coincides with **a'**.
6. The final projections are shown in Fig.5.17c.

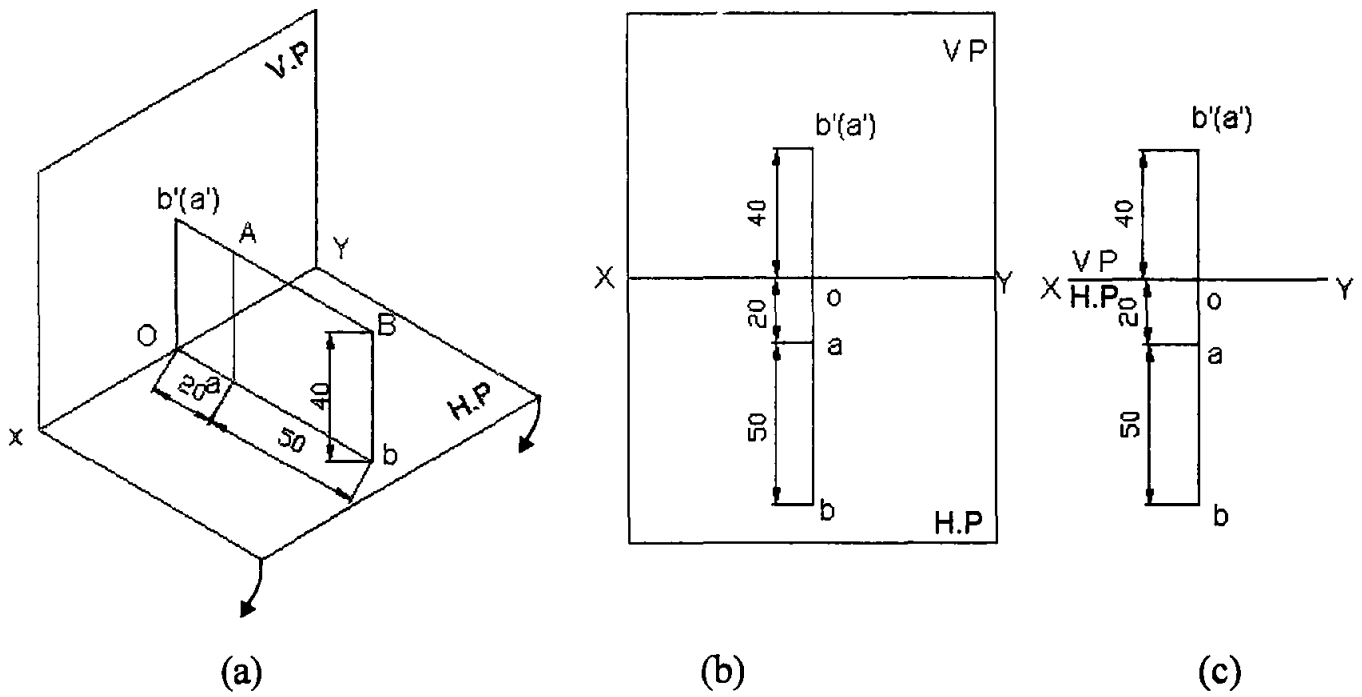

Fig. 5.17 Line perpendicular V.P and parallel to H.P.

2. Line parallel to both the planes

Problem : 3

A line CD 30 mm long is parallel to both the planes. The line is 40 mm above HP and 20 mm in front of V.P. Draw its projection.

Solution: **(Fig.5.18)**

1. Draw the **XY** line and draw a projector at any point on it.

2. To obtain the front view mark **c'** at a distance of 40 mm above **XY** (H.P.). The line CD is parallel to both the planes. Front view is true length and is parallel to **XY**. Draw **c' d'** parallel to **XY** such that **c' d' = CD = 30 mm**, which is the true length.

3. To obtain the top view; the line is also parallel to V.P and 20 mm in front of V.P. Therefore on the projector from **c'**, mark **c** at distance 20 mm below **XY** line.

4. Top view is also true length and parallel to **XY**. Hence, **cd** parallel to **XY** such that **cd=CD=30mm** is the true length. (Fig.5.18).

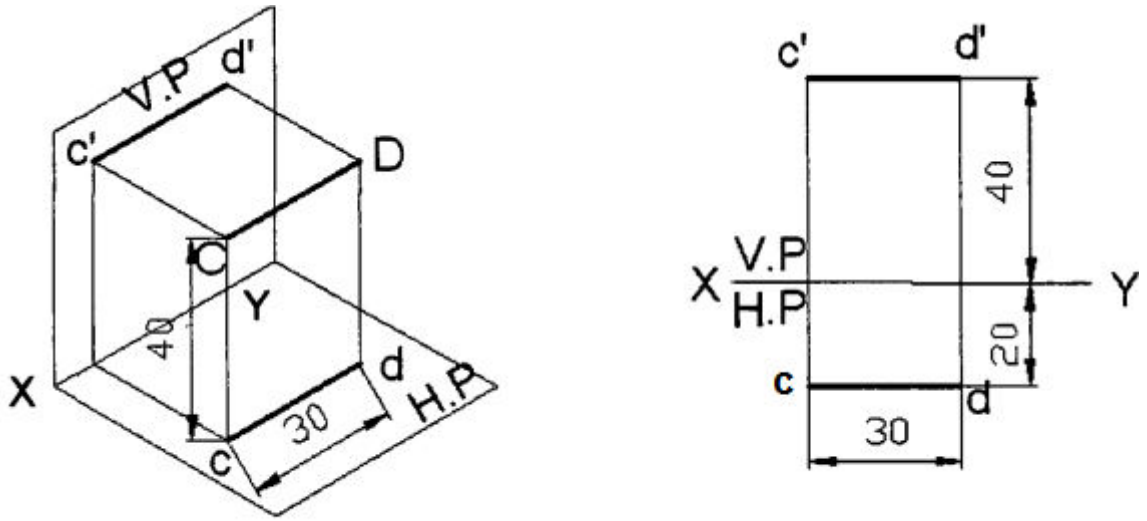

Fig. 5.18 Line Parallel to both the Planes

3. Line parallel to V.P and inclined to HP.

Problem:4

A line AB 40 mm long is parallel to V.P and inclined at an angle of 30° to HP. The end A is* 15 *mm above HP and 20 mm in front of V.P. Draw the projections of the line.

Solution: **(Fig.5.19)**

1. A is 15 mm above **H.P** mark **a'**, 15 mm above **XY**.

2. **A** is 20 mm in front of **V.P**. Hence mark **a** 20 mm below **XY**.

3. To obtain the front view **a' b'**; as **AB** is parallel to V.P and inclined at an angle **a** to H.P, **a' b'** will be equal to its true length and inclined at an angle of 30° to H.P. Therefore draw a line from **a'** at an angle 30° to **XY** and mark **b'** such that **a' b'**= 40 mm = true length.

4. To obtain the top view **ab**; since the line is inclined to H.P its projection on H.P (its top veiw) is reduced in length. From **b'** draw a projector to intersect the horizontal line drawn from **a** at **b**. **ab** is the top view of **AB**.

Note:

1. Inclination of line with the H.P is always denoted as Θ.

2. When a line is parallel to V.P and inclined at an angle of Θ to H.P, this inclination is seen in the front view and Θ indicates always the true inclination with H.P. Hence, front view is drawn first to get the true length of the line.

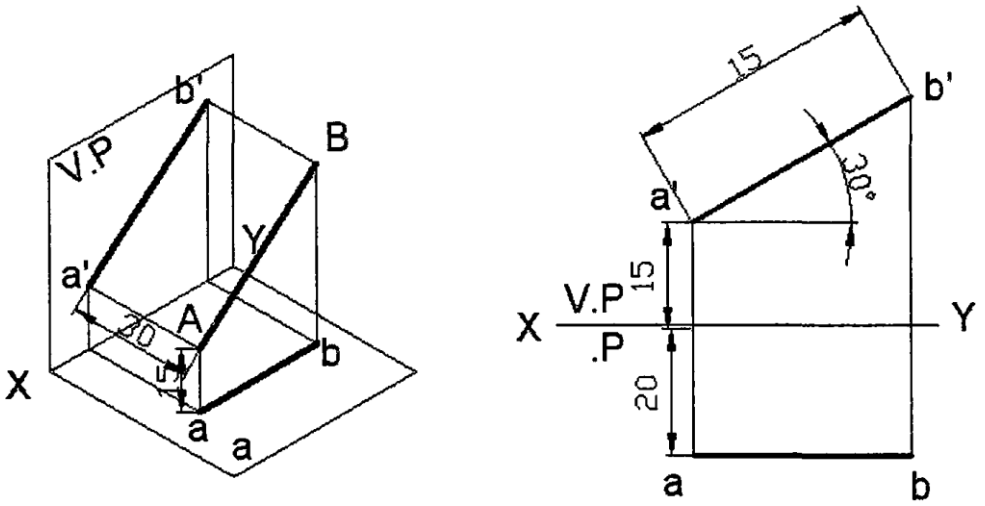

Fig. 5.19 Line parallel to V.P and inclined to H.P.

4. Line parallel to H.P and inclined to V.P.

Problem : 5

Draw the projections of straight line AB 60 mm long parallel to HP and inclined at an angle of 40° to V.P. The end A is 30 mm above HP. and 20 mm in front of V.P.

Solution: **(Fig.5.20)**

1. A is 30 mm above H.P, mark **a'**, 30 mm above **XY**.

2. A is 20 mm in front of V.P, mark **a** 20 mm below xy.
3. To obtain the top view; as AB is praallel to H.P and inclined at an angle ϕ to V.P, **ab** will be equal to the true length of AB, and inclined at angle ϕ to xy. Therefore, draw a line from **a** at 40^0 to xy and mark **b** such that **ab**=60 mm true length.
4. To obtain the front view **a'b'**, since the line is inclined to V.P its projection on V.P i.e., the front view will be reduced in length. Draw from **b** a projector to intersect the horizontal line drawn from **a** at **b'**. **a'b'** is the front view of AB.

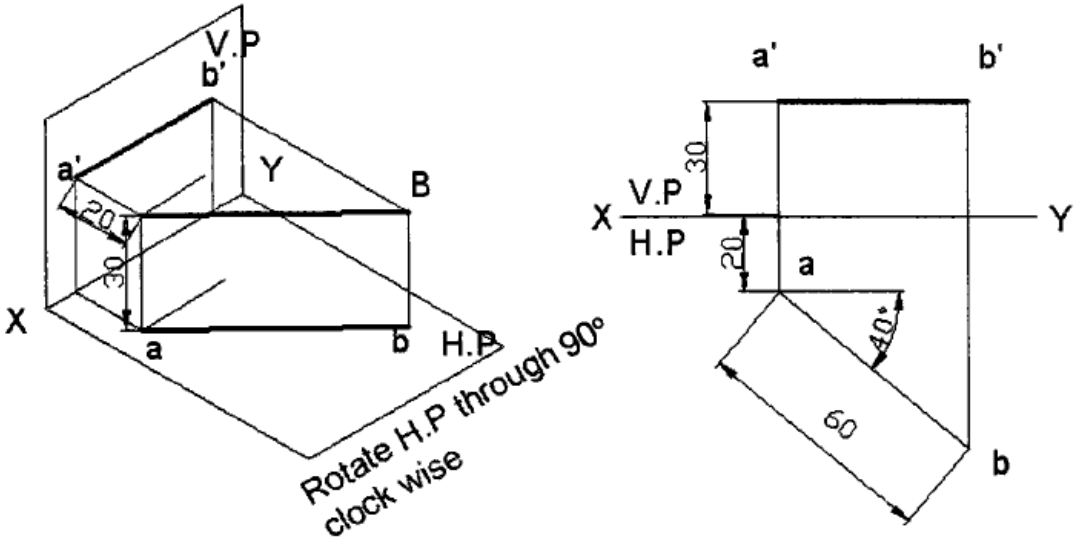

Fig. 5.20 Line Parallel to H.P and Inclined to V.P.

Solved Problem: 1

A line AB of 50 mm long is parallel to both HP and V.P. The line is 40 mm above HP and 30 mm in front of V.P. Draw the projections of the line.

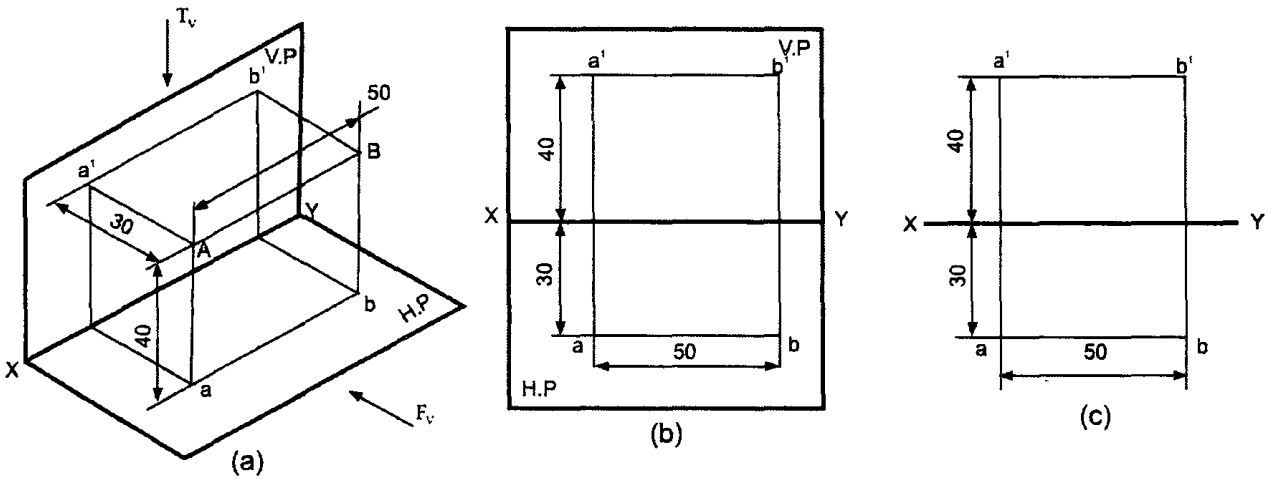

Problem : 2 - ***A line AB of 25 mm long is perpendicular to HP and parallel to V.P. The end points A and B of the line are 35 mm and 10 mm above HP respectively. The line is 20 mm in front of V.P. Draw the projections of the line.***

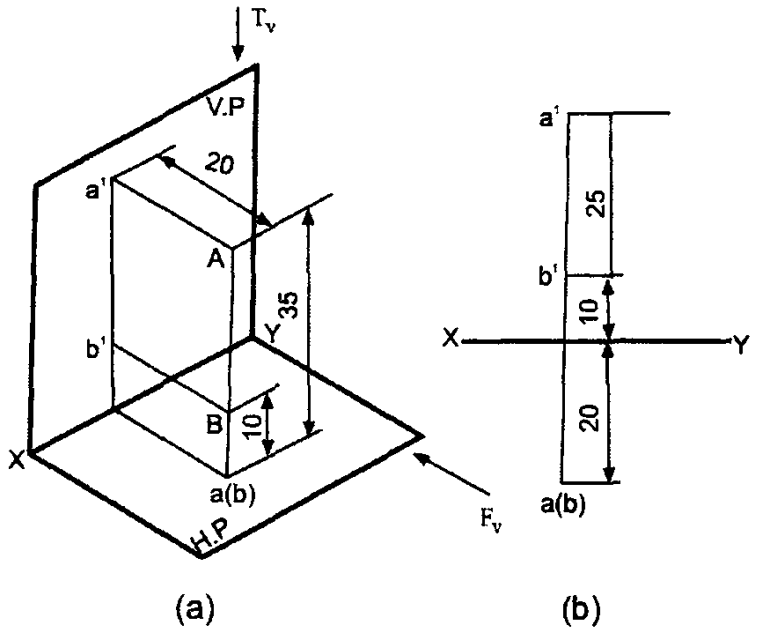

Problem: 3 - ***A line AB of 25 mm long is perpendicular to V.P and parallel to H.P. The end points A and B of the line are 10 mm and 35 mm in front of V.P respectively. The line is 20 mm above H.P. Draw its projections.***

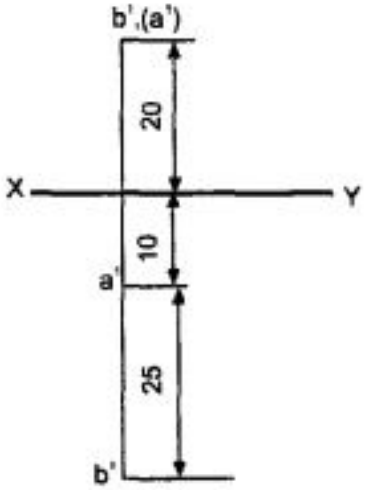

Problem:4

A line AB 50 mm long is parallel to V.P. and inclined at an angle of 30° to H.P. The end A is 15 mm above H.P. and 20 mm in front of V.P. Draw the projections of the line.

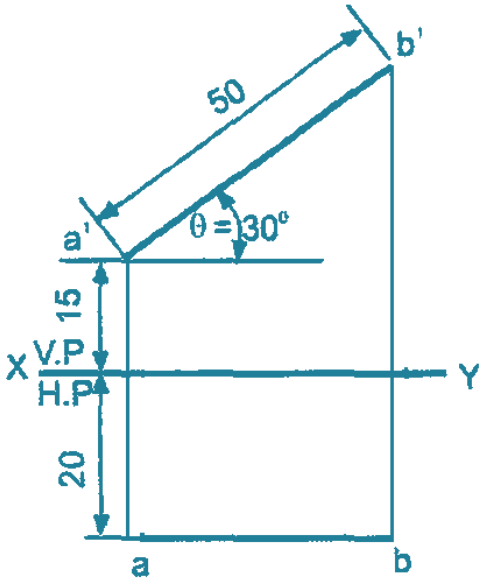

Problem: 5

A line EF 60 mm long is parallel to VP and inclined 30° to HP. The end E is 10 mm above HP and 20 mm in front of VP. Draw the projections of the line.

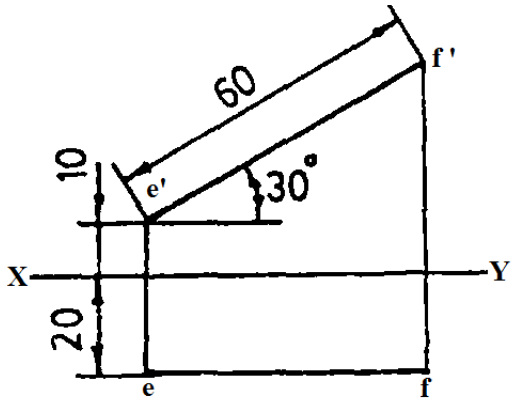

Problem: 6

The length of the front view of a line CD which is parallel to HP and inclined 30° to VP, is 50 mm. The end C of the line is 15 mm in front of VP and 25 mm above HP. Draw the projections of the line and find its true length.

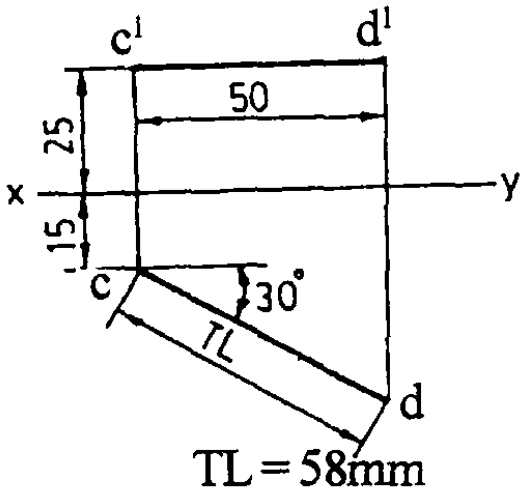

Problem: 7

A line CD 40 mm long is in V.P. and inclined to H.P. The top view measures 30 mm. The end C is 10 mm above H.P. Draw the projections of the line. Determine its inclination with H.P.

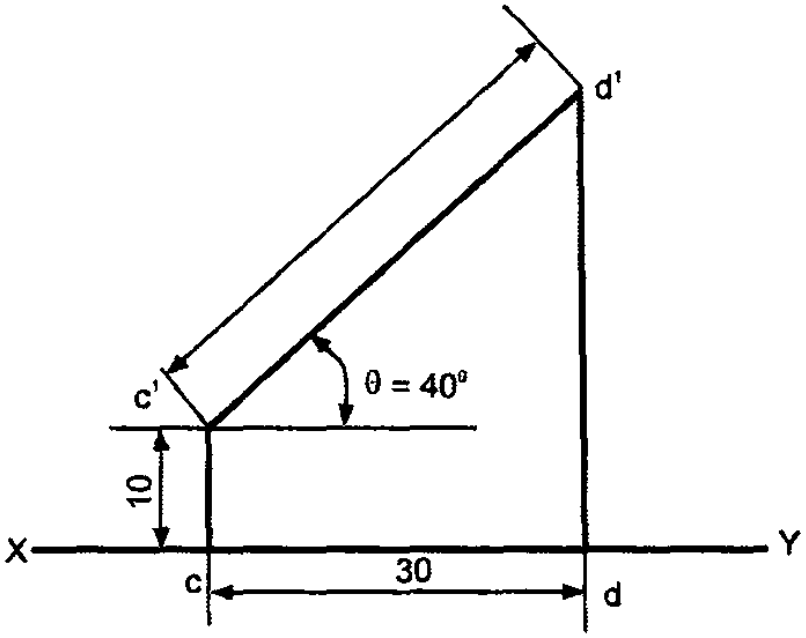

Problem: 8

A line AB 45 mm long is in H.P. and inclined to V.P. The end A is 15 mm in front of V.P. The length of the front view is 35 mm. Draw the projections of the line. Determine its inclination with V.P.

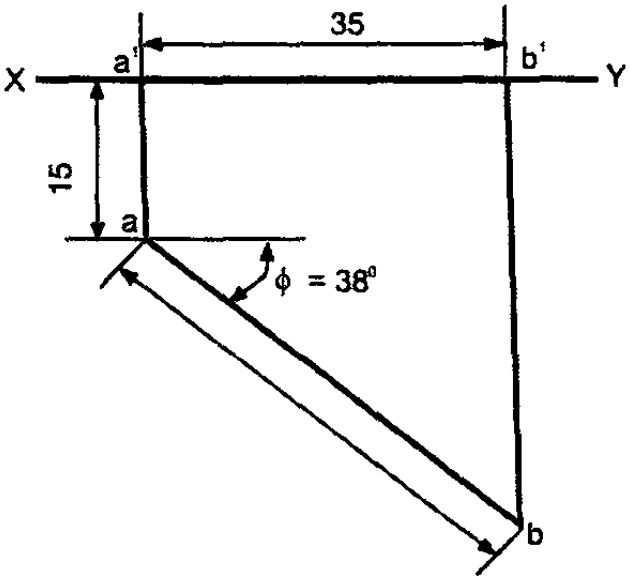

1.3 Projection of Planes

A plane is a two dimensional object having length and breadth only. Its thickness is always neglected; various shapes of plane figures are considered such as square, rectangle, circle, pentagon, hexagon, etc. The possible orientations of the planes with respect to the principal planes H.P and V.P of projection are:

1. Plane parallel to V.P and perpendicular to H.P,
2. Plane parallel to H.P and perpendicular to V.P,
3. Plane perpendicular to both the principal planes V.P & H.P.

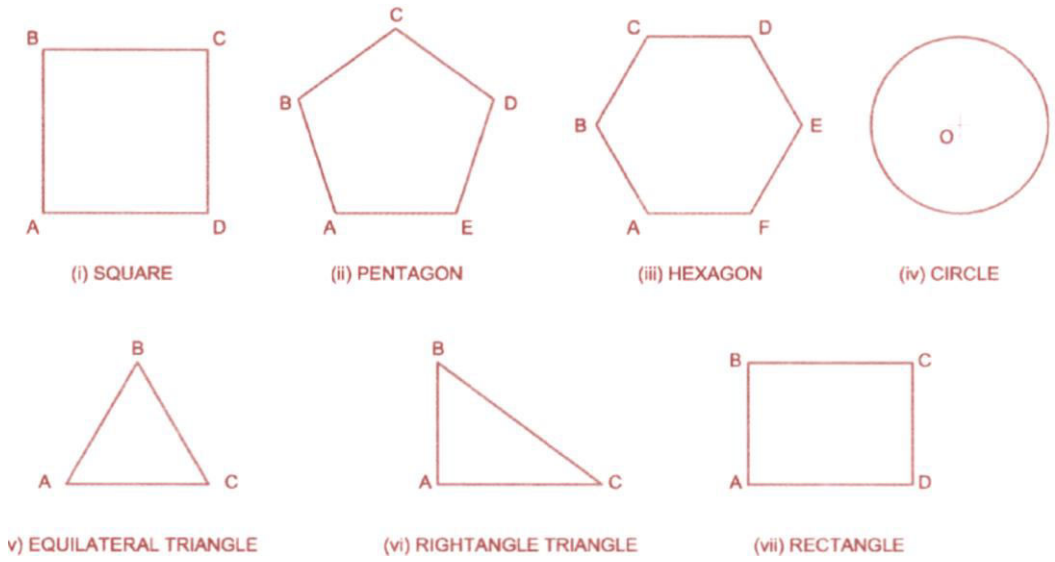

Projection of Different Planes position with respective to Principal planes

1) **Surface of Plane Parallel to the HP and perpendicular to VP**

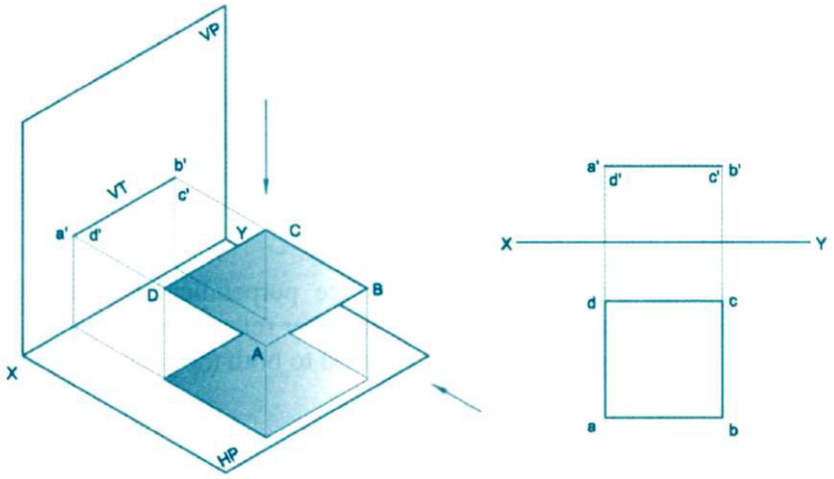

Plane Perpendicular to VP

The projections of a circular plane, parallel to H.P and perpendicular to V.P.

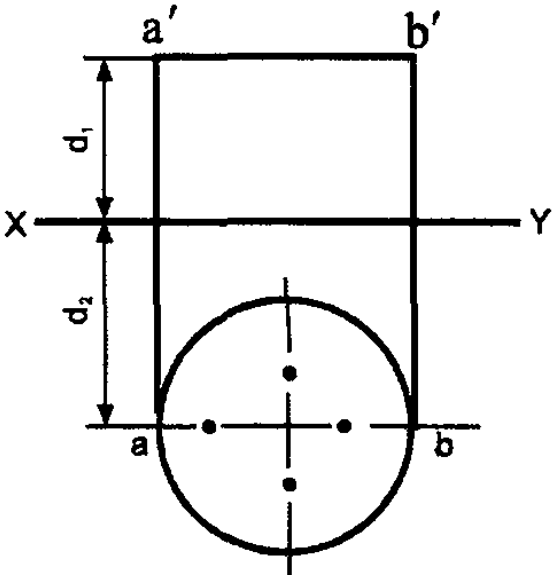

2) Surface of Plane Parallel to the VP and perpendicular to HP

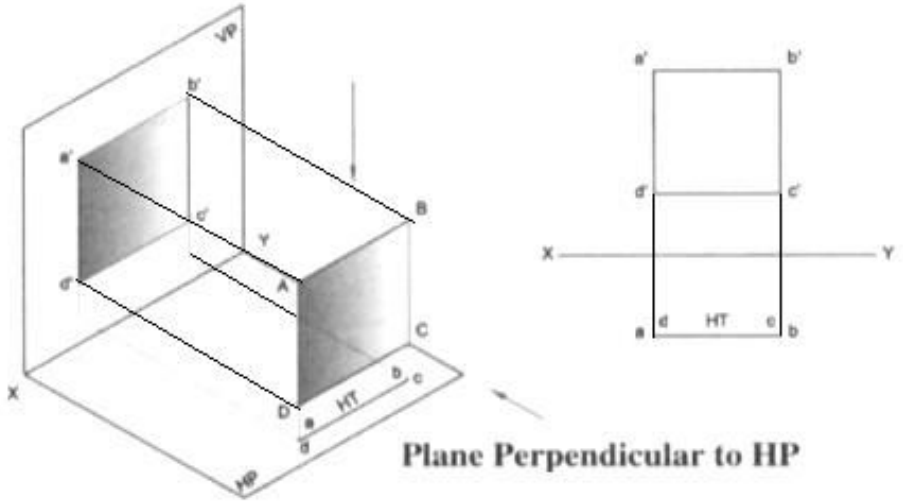

Also the following figure shows the projections of the plane, when its edges are equally inclined to H.P.

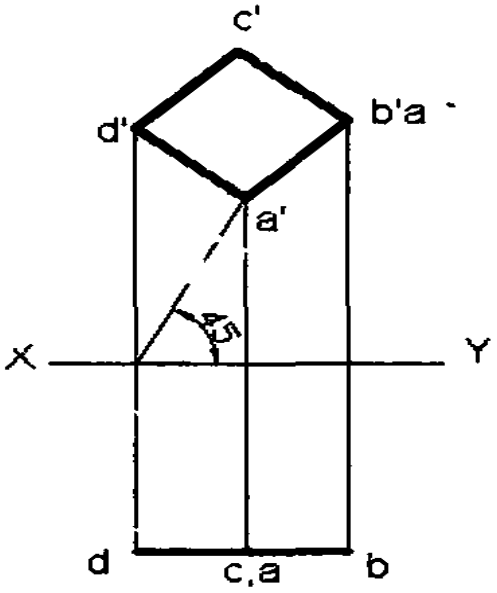

3) Surface of Plane Perpendicular to Both HP and VP

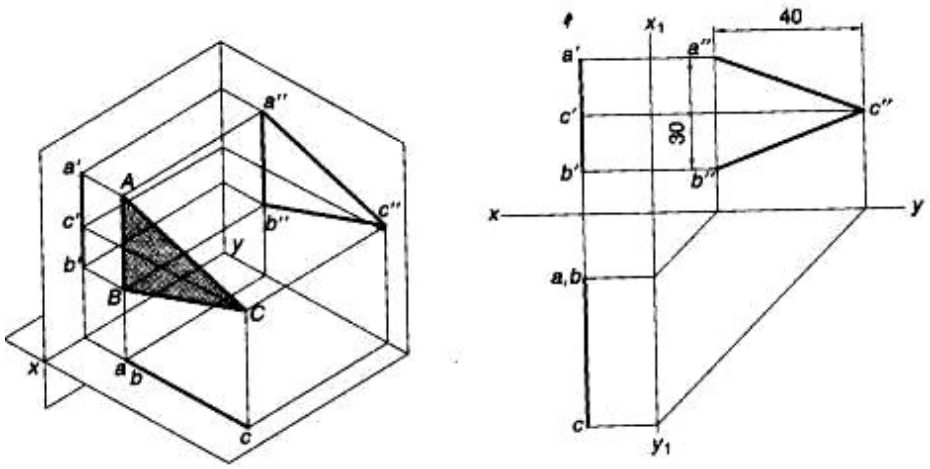

Solved Problem: 1

A square lamina ABCD of side 40mm is perpendicular to HP and parallel to VP and one of its edge is make an angle of 30° to ground. Draw its projections

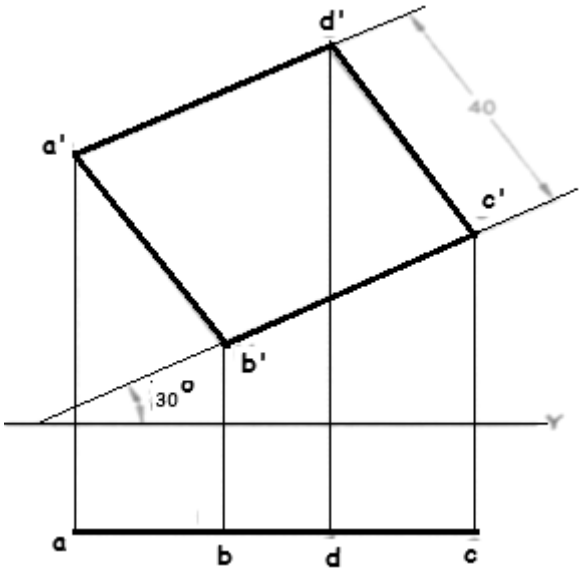

2. A Circular lamina of diameter 50 mm is kept perpendicular and infront to VP is 30 mm and parallel and above to HP is 20 mm.

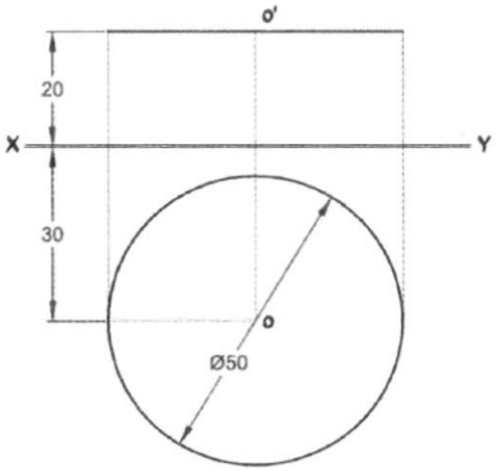

3) A square plane ABCD with side of 40mm is Perpendicular to Both HP and VP. Draw its projection.

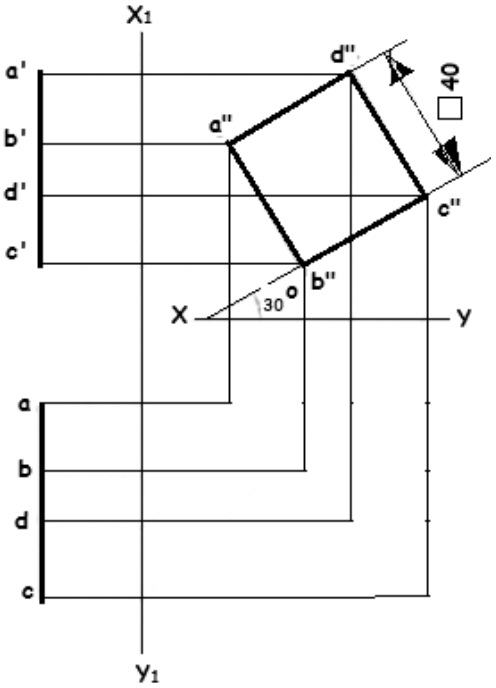

Exercises

Part – A (5 marks questions)

1. Draw the projections of a point A which is at 40 mm above HP and 25 mm in front of VP.

2. A point F is at 55 mm above HP and 40 mm behind VP. Draw its projection.

3. A point P is lying at 30 mm behind VP and 60 mm below HP. Draw its projections.

4. Draw the projections of a point S which lies at 40 mm below the HP and 70 mm in front of VP.

5. Mark the projections of the following points,

- **Point P, 50 mm behind the VP and 15 mm above the HP.**
- **Point Q, 40 mm below the HP and in the VP.**
- **Point R, 40 mm in front of the VP and 30 mm above the HP.**
- **Point S, 30 mm in front of the VP and 50 mm below the HP.**
- **Point T, 35 mm behind the VP and 20 mm below the HP.**

Part – B (15 marks questions)

6. Draw the projections of a straight line 70 mm long when it is parallel to both HP and VP. It is 15 mm in front of VP and 40 mm above HP.

7. A straight line of length 70 mm is parallel to VP and perpendicular to HP. Ifs one end is 20 mm below the HP and 50 mm behind VP. Draw its orthographic projections.

8. A line of length 70 mm is parallel and 20 mm in front of VP. It is also inclined at 45° to HP and one end is on it. Draw its projections.

9. A line 75 mm long is inclined at 50° to VP and one of the ends is on it. It is parallel to HP and 40 mm below it. The line is behind VP. Draw its projections.

<u>Line on HP and inclined to VP:</u>

1. A line AB on 50mm long is on HP and inclined at 40^0 to V.P. The end A is 20mm in front of V.P Draw the projections.

<u>Line on V.P and inclined to H.P:</u>

1. A line CD 40mm long is in V.P. and inclined at 35^0 to H.P. The end C is 15mm above H.P. Draw the projections.

2. A straight line AB 45mm is parallel to V.P. and inclined at 35^0 to H.P. The line is 25mm in front of V.P and the end A is 20mm above H.P. Draw the projections.

<u>Line on H.P. and Parallel to V.P.:</u>

1. A line RS 50mm long is on H.P. and parallel to V.P. The line is 25mm in front of V.P. Draw its projections.
2. A straight line RS 50mm long is parallel to H.P. and inclined at 35^0 to V.P. The end R is 25mm above H.P. and 20mm in front of V.P. draw its projections.
3. A line AB 30mm long is perpendicular to H.P. and parallel to V.P. The end B is 15mm above H.P. and 20mm in front of V.P. Draw the projections of line.

Line parallel to both H.P. and V.P.

1. A line PQ 35mm long is parallel to both H.P. and V.P. The line is 30mm above H.P. and 25mm in front of V.P. Draw the projections.

PROJECTION OF PLANE:

Draw the projections of the given surface planes with adopt the following conditions,

a) **Surface plane perpendicular to H.P & Parallel to V.P**
b) **Surface plane perpendicular to V.P & Parallel to H.P and**
c) **Surface plane perpendicular to both H.P & V.P**

- An equated triangular lamina side base of 25 mm.
- A square lamina side of 30 mm.
- A circular lamina of diameter 40 mm.
- A Hexagonal lamina side base of 35 mm.

UNIT-II PROJECTION OF SOLIDS AND SECTION OF SOLIDS

2.1 Projection of Solids

Introduction:

A solid has three dimensions, the length, breadth and thickness or height. A solid may be represented by orthographic views, the number of which depends on the type of solid and its orientation with respect to the planes of projection. solids are classified into two major groups**.**

(i) Polyhedral, and (ii) Solids of revolution

POLYHEDRAL

A polyhedral is defined as a solid bounded by plane surfaces called faces. They are:

(i)Regular polyhedral **(ii) Prisms and** **(iii) Pyramids**

Regular Polyhedral

A polyhedron is said to be regular if its surfaces are regular polygons. The following are some of the regular polyhedral.

SOLIDS

Prisms: A prism is a polyhedron having two equal ends called the bases parallel to each other. The two bases are joined by faces, which are rectangular in shape. The imaginary line passing through the centres of the bases is called the axis of the prism.

A prism is named after the shape of its base. For example, a prism with square base is called a square prism, the one with a pentagonal base is called a pentagonal prism, and so on (Fig) The nomenclature of the prism is given in Fig.

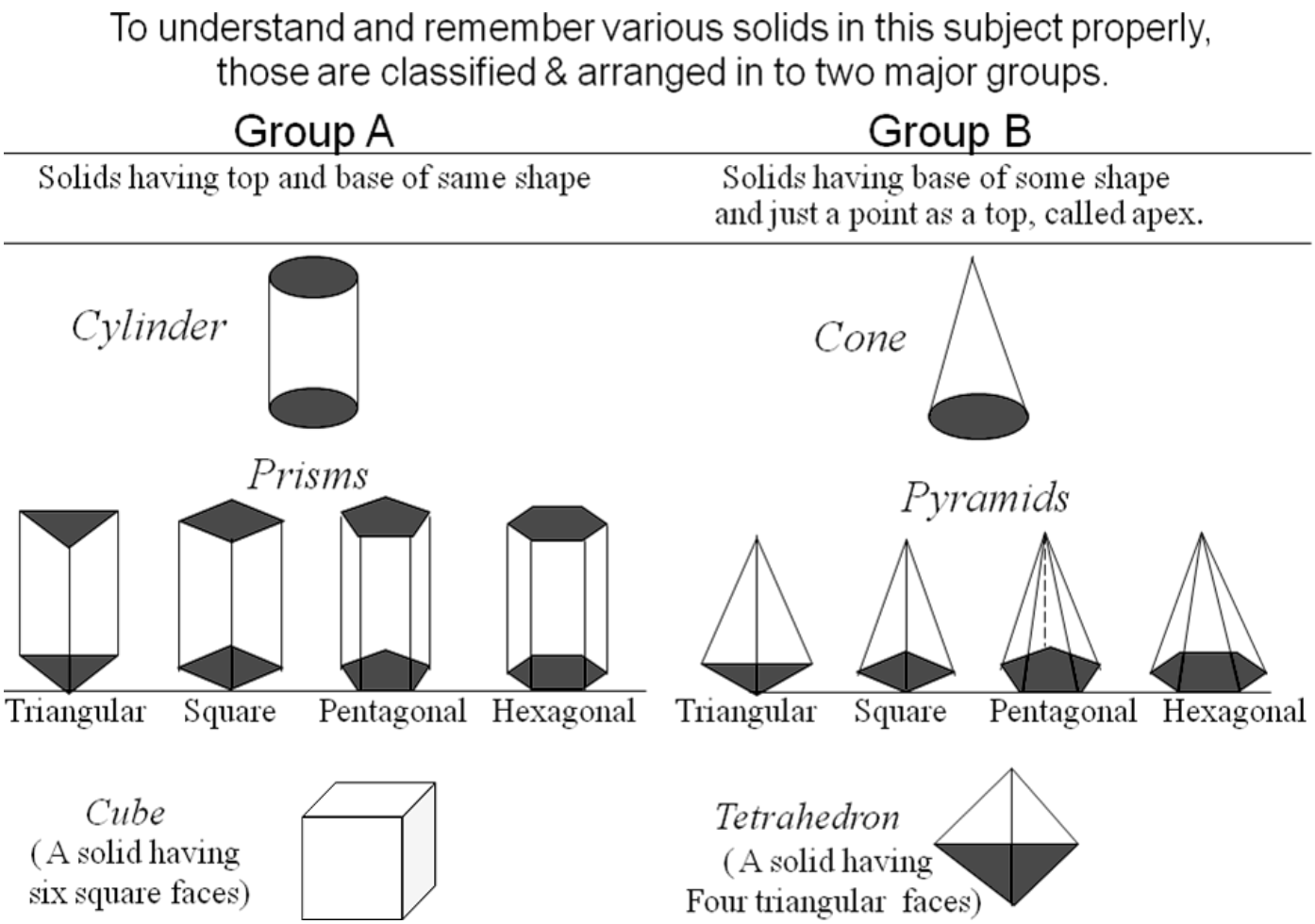

Pyramids:

A pyramid is a polyhedron having one base, with a number of isosceles triangular faces, meeting at a point called the apex. The imaginary line passing through the centre of the base and the apex is called the axis of the pyramid.

The pyramid is named after the shape of the base. Thus, a square pyramid has a square base and pentagonal pyramid has pentagonal base and so on. The nomenclature of a pyramid is shown in Fig.

Types of Pyramids:

There are many types of Pyramids, and they are named after the shape of their base. These are Triangular Pyramid, Square Pyramid, Pentagonal pyramid, hexagonal pyramid and tetrahedron.

(a) **Tetrahedron: It consists of four equal faces, each one being a equilateral triangle.**

(b) **Hexa hedron(cube): It consists of six equal faces, each a square.**

(c) **Octahedron: It has eight equal faces, each an equilateral triangle.**

(d) **Dodecahedron: It has twelve regular and equal pentagonal faces.**

(e) **Icosahedrons: It has twenty equal, equilateral triangular faces.**

Solids of Revolution: If a plane surface is revolved about one of its edges, the solid generated is called a solid of revolution. The examples are (i) Cylinder, (ii) Cone, (iii) Sphere.

Frustums and Truncated Solids: If a cone or pyramid is cut by a section plane parallel to its base and the portion containing the apex or vertex is removed, the remaining portion is called frustum of a cone or pyramid

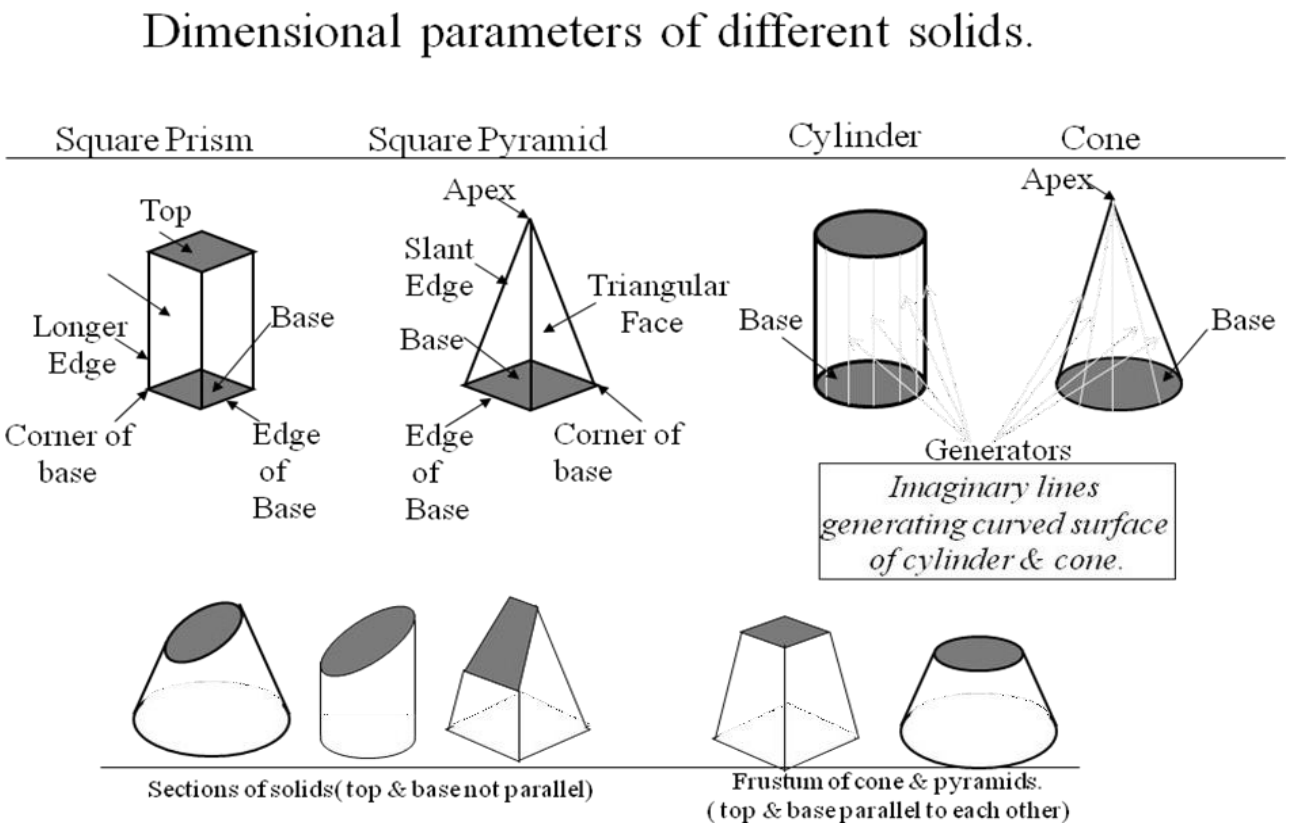

Prisms Position of a Solid with Respect to the Reference Planes: The position of solid in space may be specified by the location of either the axis, base, edge, diagonal or face with the principal planes of projection. The following are the positions of a solid considered.

1. **Axis perpendicular to HP and parallel to VP**
2. **Axis perpendicular to VP parallel to HP**
3. **Axis parallel to both the HP and VP**
4. **Axis inclined to HP and parallel to VP**
5. **Axis inclined to VP and parallel to HP**

The position of solid with reference to the principal planes may also be grouped as follows:

1. Solid resting on its base.
2. Solid resting on anyone of its faces, edges of faces, edges of base, generators, slant edges, etc.
3. Solid suspended freely from one of its corners, etc.

1.Axis perpendicular to HP and parallel to VP

A solid when placed on HP with its axis perpendicular to it, and then it will have its base on HP. This is the simplest position in which a solid can be placed.

When the solid is placed with the base on HP position, in the top view, the base will be projected in its true shape.

Hence, when the base of the solid is on HP, the top view is drawn first and then the front view and the side views are projected from it.

Problem: 1

(i) A Cube of 35mm side rests on the ground with a face parallel and 10mm infront to VP. Draw the top and front views of the cube. (ii) the projections of a cube, resting on one of its bases on H.P. such that an edge of its base is inclined at 30° to V.P.

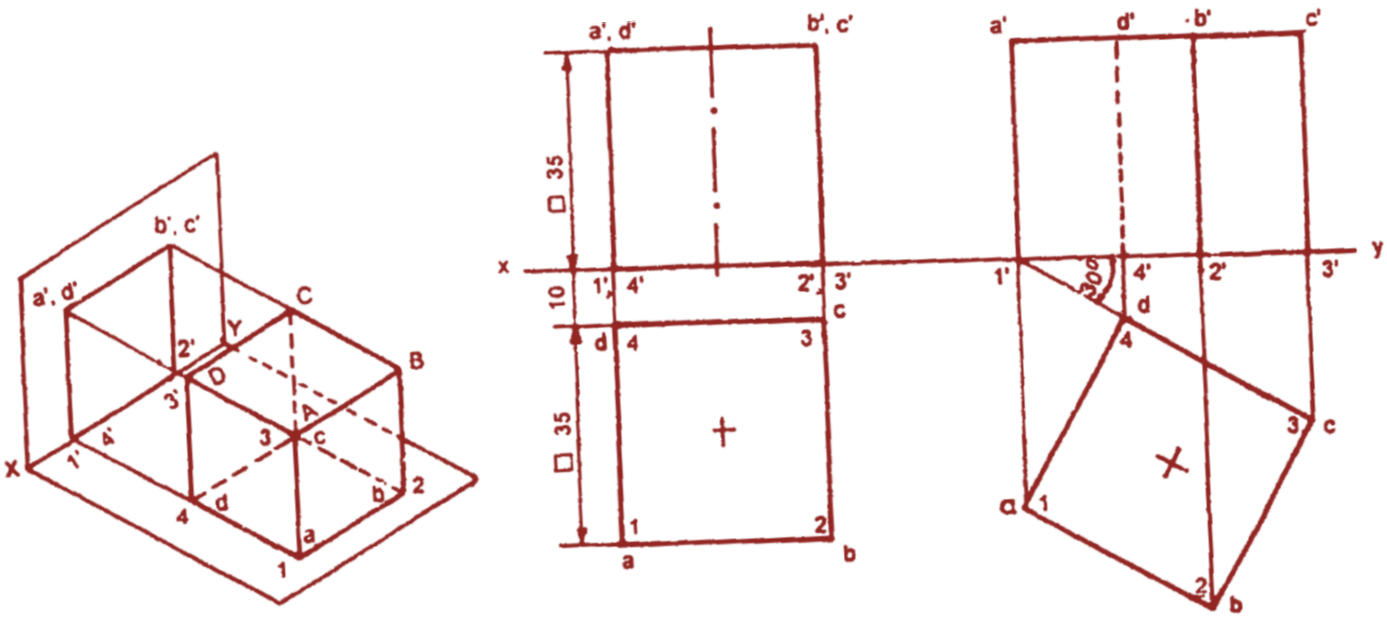

Fig 6.7

Figure 6.7a shows the cube positioned in the first quadrant.

1. Draw the top view such that one of its edges is 10mm below xy.
2. Obtain the front view by projection, keeping one of its bases on xy.

Note: (i) For the cube considered ABCD is the top base and 1234 the bottom base, (ii) Figure 6.7c shows the projections of a cube, resting on one of its bases on H.P. such that an edge of its base is inclined at 30° to V.P.

Problem: 2

Project the front view and top view of a hexagonal prism of 25 mm base edges and 50 mm height, having two of its vertical rectangular faces parallel to V.P; and its base resting on H.P.

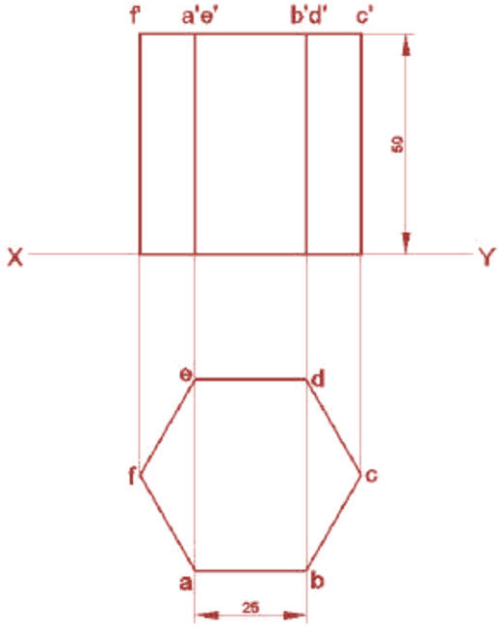

1. As the axis is perpendicular to HP the top view is hexagonal (i.e. the shape of the base top) and the hexagon abcdef (a'b'c'd'e'f') is to be drawn with two sides parallel to XY representing faces of the prism in the top view.

2. Draw the projectors from the points of the top view and mark a'1b'1c'1d'1e'1f'1 on XY. Draw a horizontal line at height 50mm, since the height is 50mm and draw projectors from the $a'_1b'_1c'_1d'_1e'_1f'_1$points till intersects the line. Mark the corresponding points as a'b'c'd'e'f'.

Problem: 3

A triangular pyramid with 30 mm edges at its base and 35 mm long axis resting on its base with an edge of the base near the V.P, parallel to and 20 mm from the V.P; Draw the projections of the pyramid, if the base is 20 mm above the H.P

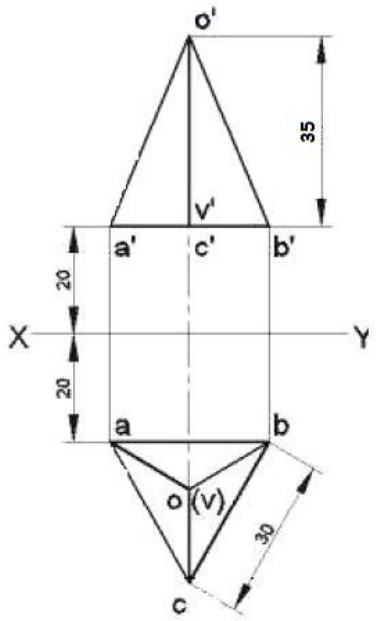

1. Draw the top view of the base abc an equilateral triangle of side 30mm each with ab parallel to XY and 20 mm from XY. Find the centre of the triangle as O by drawing perpendicular bisectors of any two sides. Join oa, ob, and oc.

2. Draw the front view of the base as a'c'b' on XY. Mark o' the front view of o at 35mm above XY on the projectors from o, as the height is 35mm.

3. Join o' with a', b' and c' to get the front view.

Problem: 4

A triangular prism has a base of equilateral triangle of side 25mm. Axis length is 40mm. It rests on its base on the ground with one of its rectangular face is parallel to VP and the nearest edge is parallel to VP is 10mm from it. Draw its Plan and Elevation.

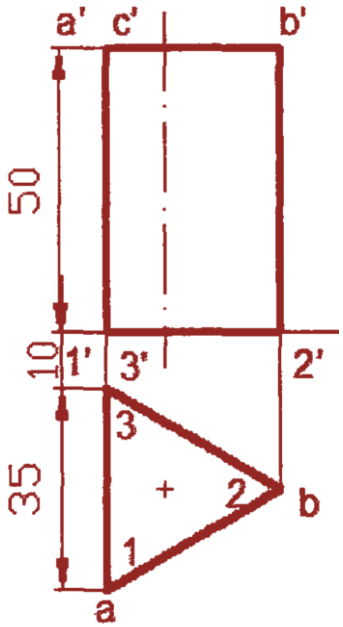

1. Draw the top view keeping one edge perpendicular to xy and one corner at 10mm from xy.

2. Obtain the front view by projection, keeping the height equal to 50mm.

Problem: 5

Draw a projections of a cylinder of 35mm diameter of base and 55mm height resting with its base on the HP.

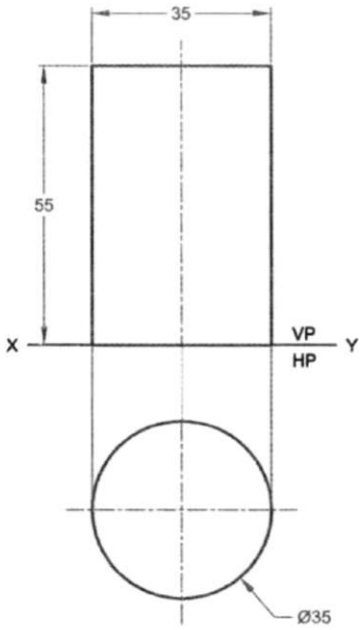

1. Draw the reference line xy and locate O at 20mm below it.

2. With centre O and radius 17.5mm draw a circle forming the top view.

3. Obtain the front view by projection, keeping the height equal to 55mm and the base coinciding with xy.

Problem: 6

Draw projections of a Cone of 35mm diameter of base and height 55mm resting on the HP with its base.

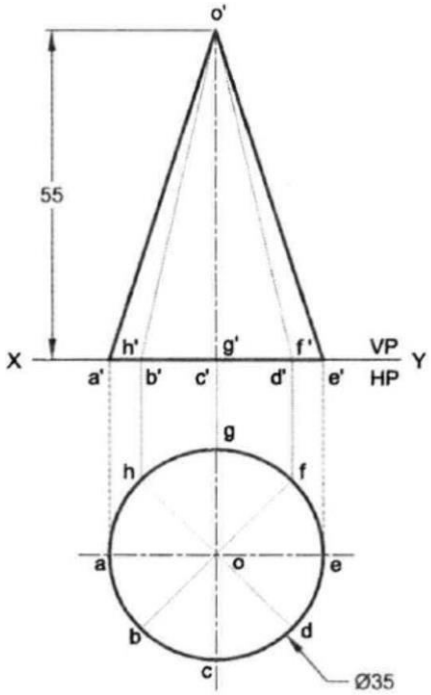

1. Top view gives the true size of the base i.e. a circle. Draw a circle of 35mm diameter. Mark 8 points at equal distance on the periphery. Mark the centre of the circle.

2. Draw projectors from all points on the periphery and mark on XY as front view a'b'c'd'e'f'g'h' . Draw the front view of the centre o' at height above XY. Join o' and other points of the base to get the front view.

Problem: 7

Draw the top view and the front view of hexagonal pyramid of 25mm side of base and height 55mm with its base on the HP, when two base edges are parallel to VP.

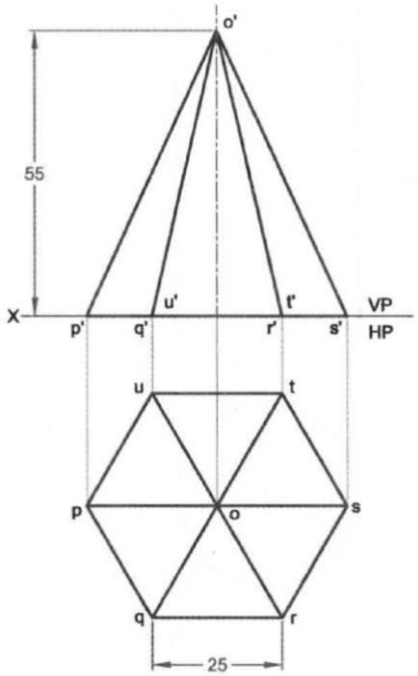

1. Draw the top view as hexogen with base side of 25mm and keeping one edge of the base parallel to xy line. Naming it from p to u.

2. Obtain the front view by projection keeping the height equal to 55mm. Mark corresponding notation.

2.Axis perpendicular to VP parallel to HP

When a solid is placed with its axis perpendicular to VP, the base of the solid will always be perpendicular to HP and parallel to VP.

Hence in the front view, base will be projected in true shape.

Therefore, when the axis of the solid is perpendicular to VP, the front view is drawn first and then the top and side views are drawn from it.

- When a cylinder rests on HP with its axis perpendicular to VP, one of its generators will be on HP.
- When a cone rests on HP with its axis perpendicular to VP, one of the points on the circumference of the base will be on HP.

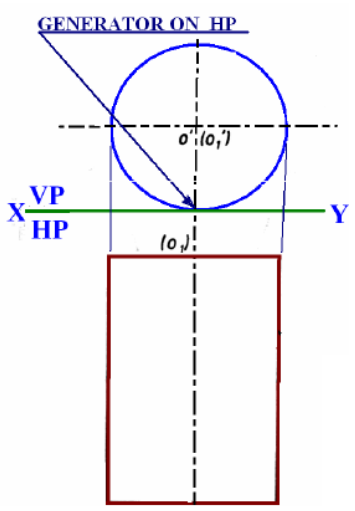

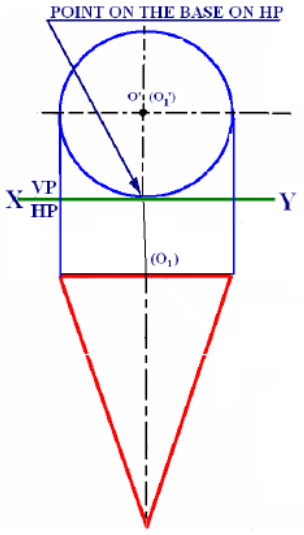

Problem:1

A hexagonal prism of base 40 mm and axis 65 mm is resting on HP with one of its faces. If axis is perpendicular to VP and parallel to HP and it is 20 mm in front of VP. Draw its projections.

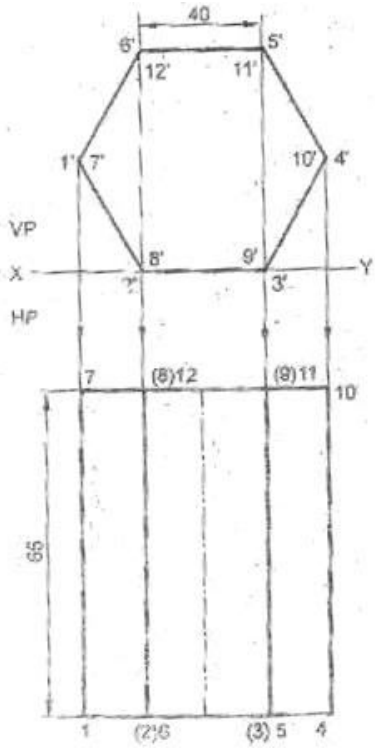

(i) Begin with the front view. Construct a regular hexagon of 40mm base side resting with its base above *xy*.

(ii) Project down the top view, keeping the projection line for nearer end, viz. 1- 4, 20 mm below *xy*.

Problem:2

Draw the front view and top view of a cone of base diameter 35 mm and axis 55 mm long resting on HP and axis perpendicular to V.P.

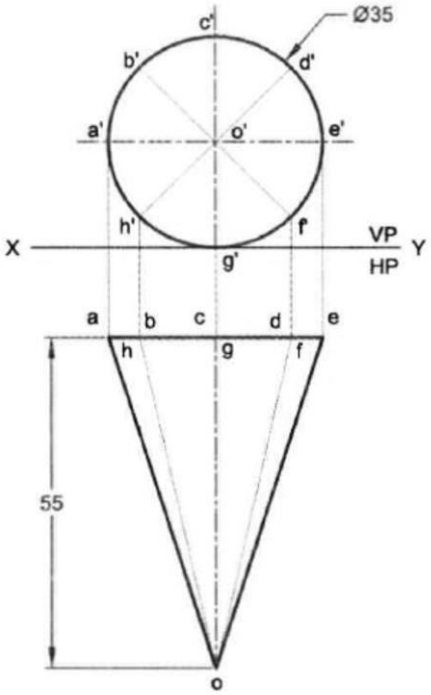

(i) Begin with the front view. Draw a Circle (True shape of the cone) of 35 mm diameter with its centre, divide the circle into 8 parts then naming it as per drawing above *xy*.

(ii) Project down the top view, keeping the line to meet the point 'O' below *xy.(Edge generators only dark)*

Problem:3

A pentagonal Prism having a base with 30 mm side and 60mm long Axis, has one of its bases in the VP. Draw Its projections When rectangular face is parallel to and 15 mm above the HP

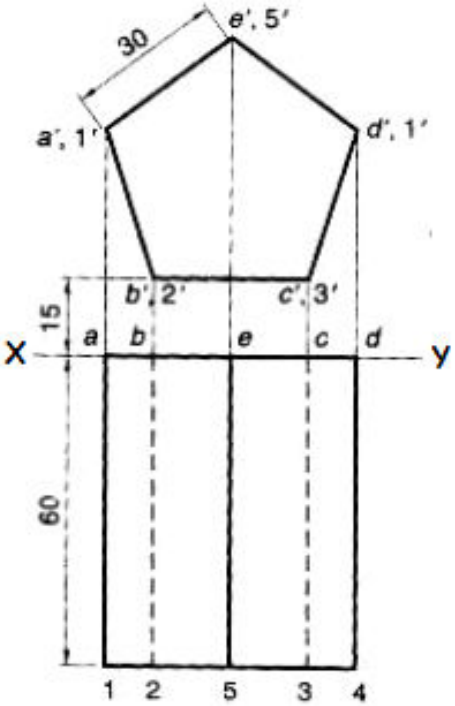

Problem:4

Draw the front view and top view of a pentagonal pyramid of base side of 25 mm, axis 60mm and its rectangular face is inclined at 45° to HP and axis perpendicular to V.P.

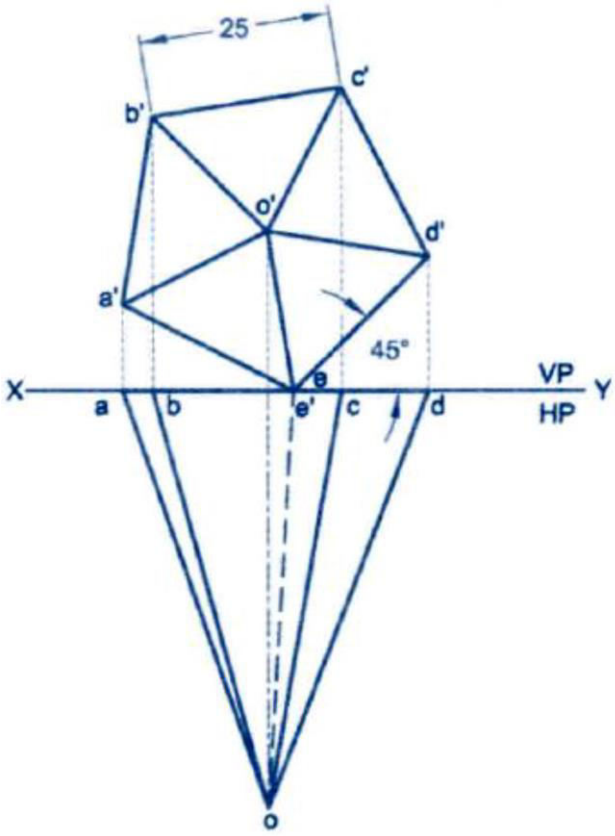

1. Since the axis is perpendicular to VP the front view is true size of the base.

2. Draw the top view of the hexagon of base side of 25mm a'b'c'd'e' with inclination of 45° on XY. Draw the opposite side bisectors to get the front view of the apex o'.

3. Draw projector below XY and draw the top view at any distance from XY.

4. Draw the apex o at 60mm below abcde on the projector from o'. Join oa, ob, oc, od and oe to get the top view.

3. Axis parallel to both the HP and VP

- When the axis of solid is parallel to both the planes, neither the front view nor the top view reveal the true shape of the base.
- ***In such case, the side view must be drawn first which shows the true shape of the base.***
- The front and top view are then projected from the side view.

Problem:1

A triangular prism base 25 mm side and height 50 mm is resting on the H.P. on one of its rectangular faces with the axis parallel to the V.P. Draw its projections.

As the axis is parallel to both the planes, begin with the side view.

(i) Draw an equilateral triangle representing the any side view, with one side in *xy*.

(ii) Project the front view horizontally from this triangle.

(iii) Project down the top view from the front view and the side view, as shown.

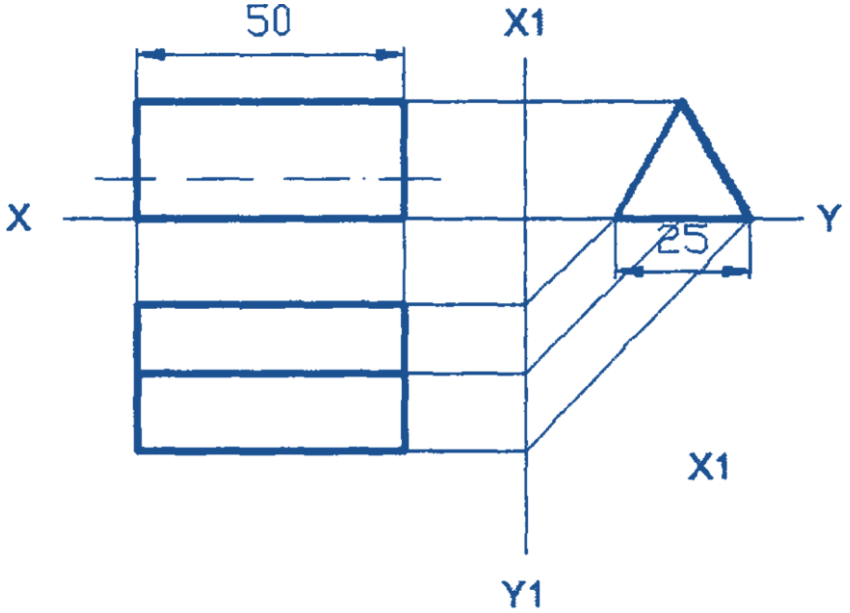

1. Draw the left side view, an equilateral triangle of side 25mrn, keeping one edge on xy.

2. Draw the reference line x,y, perpendicular to xy and to the left of the above view at any convenient location.

3. Obtain the front view by projection, keeping its length equal to 50mrn.

4. Obtain the top view by projecting the above two views.

Note: **Rules to be observed while drawing the projections of solids.**
(i) If a solid has an edge of its base on H.P or parallel to H.P, that edge should be kept perpendicular to V.P. If the edge of the base is on V.P or parallel to V.P, that edge should be kept perpendicular to H.P.

(ii) If a solid has a corner of its base on H.P, the side of the base containing that corner should be kept equally inclined to V.P. If a solid has a corner of its base on V.P, the sides of the base containing that corner should be kept equally inclined to H.P.

Problem:2

Draw the projections of a hexagonal pyramid of base side 25 mm and axis 55 mm long. It is lying on the ground . Its axis is parallel to both VP and HP.

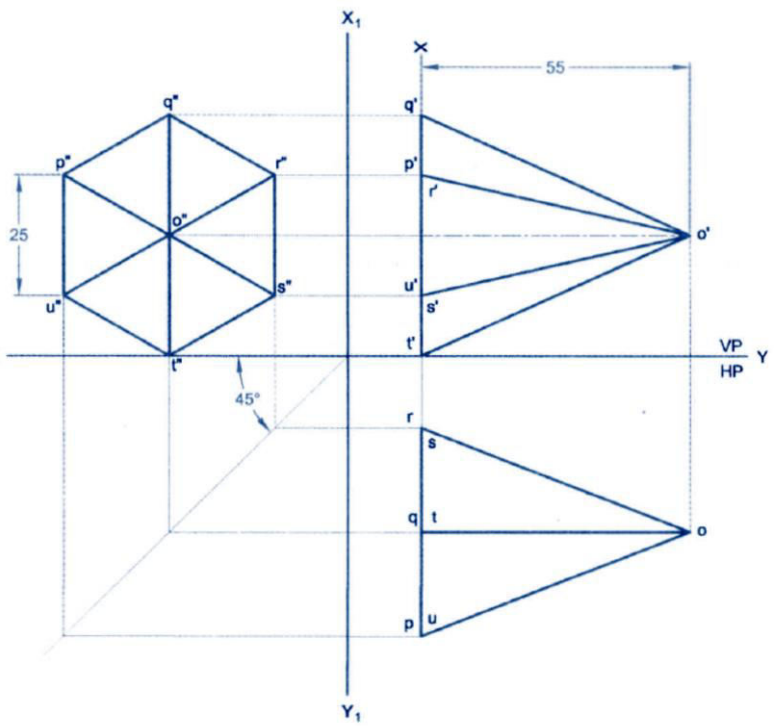

4) Axis inclined to HP and parallel to VP

- When a solid is placed on HP with its axis inclined to HP**, the elemental portion of the solid that lies on HP depends upon the type of the solid.**
- **When a prism** is placed on HP with its axis inclined to it, **and then it will lie either on one of its base edges or on one of its corners on HP.**
- When a **pyramid** is placed on HP with **its axis inclined to HP**, then we will have one of its **base edges** on HP or one of its **base corners** on HP or **one of its slant edges** on HP or one of its **triangular faces** on HP or **an apex** on HP.

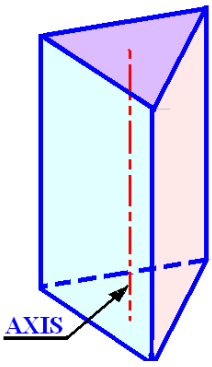

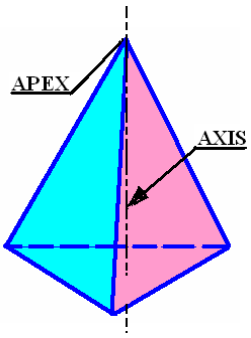

Problem:1

A hexagonal prism, base 30 mm side and axis 75 mm long, has an edge of its base* on *the ground. Its axis is inclined at* 45° *to H.P (the ground) and parallel to the V.P. Draw its projections.

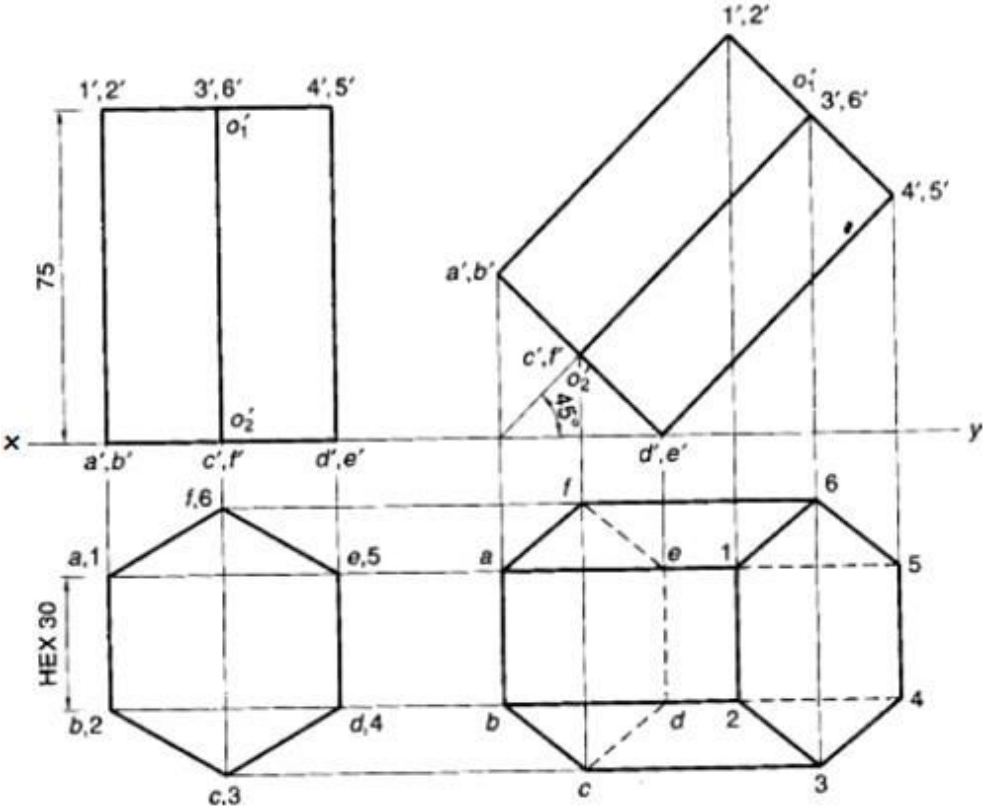

Stage 1

Assume that the axis is perpendicular to H.P.

1. Draw the projections of the prism keeping one of its bases on H.P and a rectangular face in V.P.

Stage 2

1. Rotate the front view so that the axis makes the given angle with H.P.
2. Redraw the front view such that the axis makes 45° with xy. This is the final front View.
3. Obtain the final top view by projection.

Problem:2

A hexagonal pyramid of base edge 25 mm and altitude 55 mm rests on one of its base edges on the HP with its axis inclined at 45° to the HP and parallel to the VP. Draw its projections.

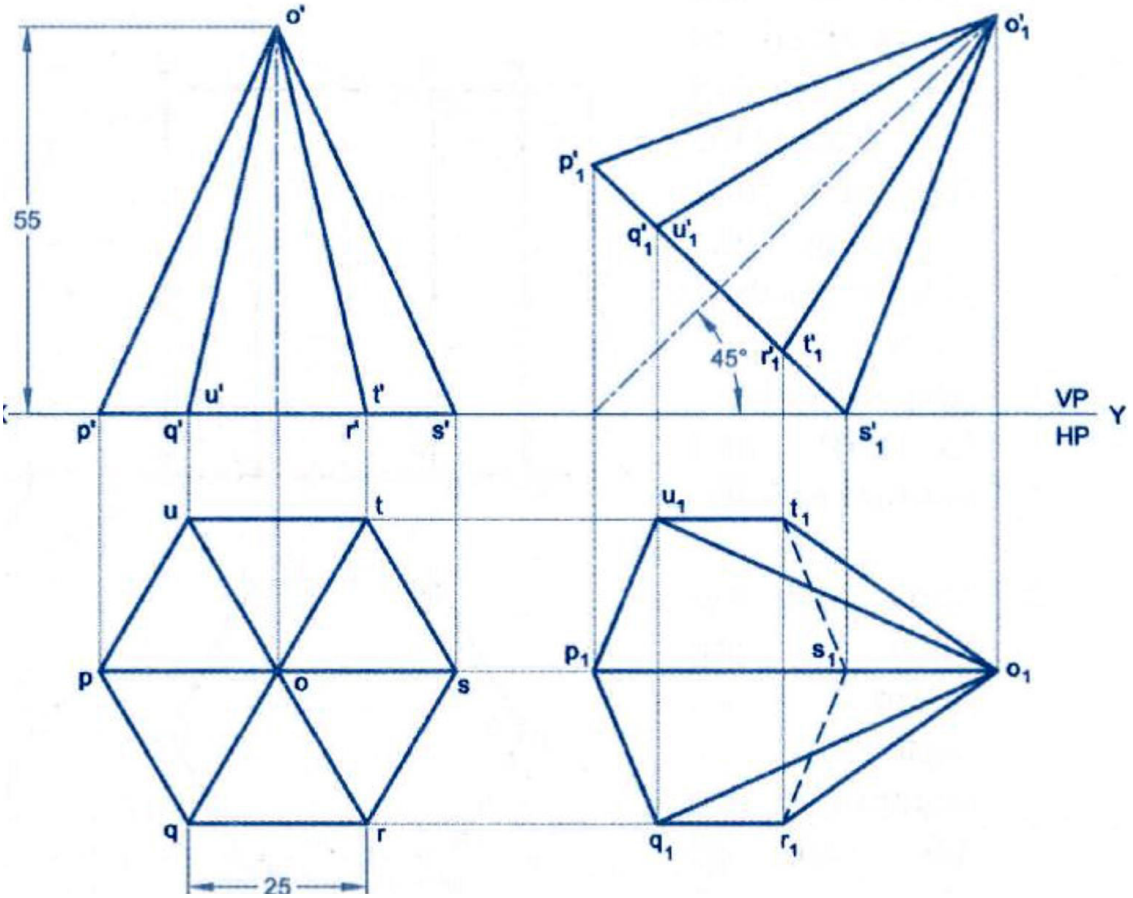

Problem:3

A pentagonal prism having a 25 mm edges at its base and axis of 50 mm length is resting on one of the edges of its base with its axis parallel to the V.P and inclined at 45° to the H.P

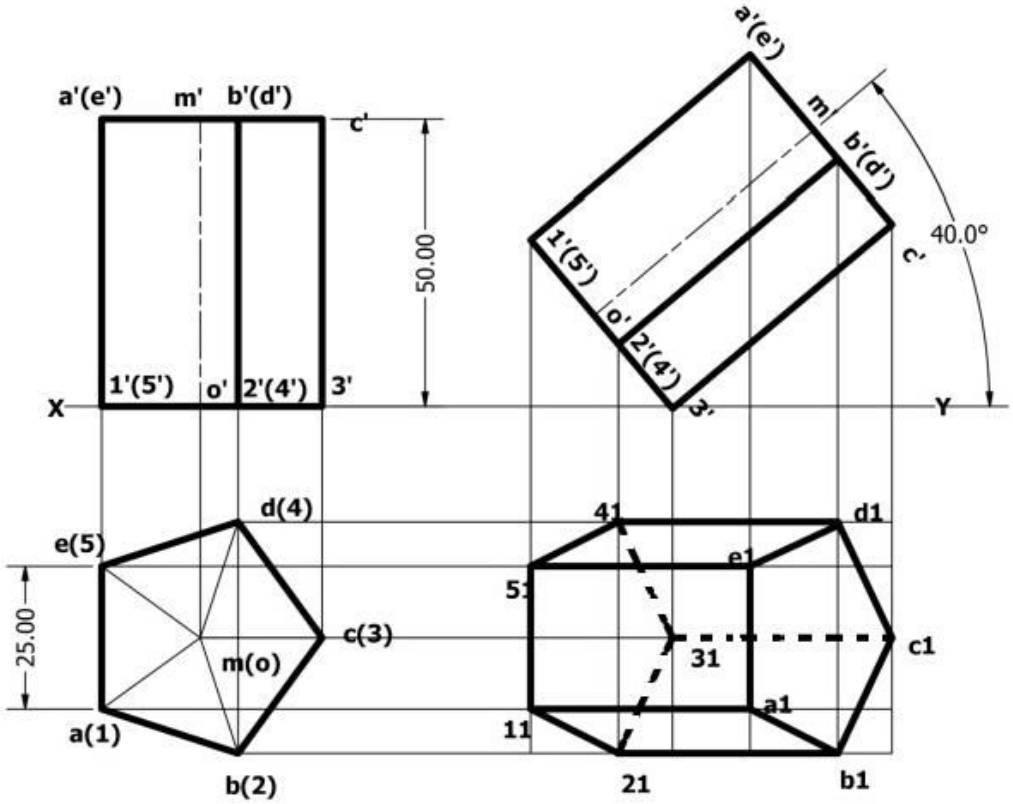

Problem:4

A Cone of base diameter 50 mm , 60 mm long resting on the ground with its axis making an angle of 30° with HP. Its axis parallel to VP. Draw its projections.

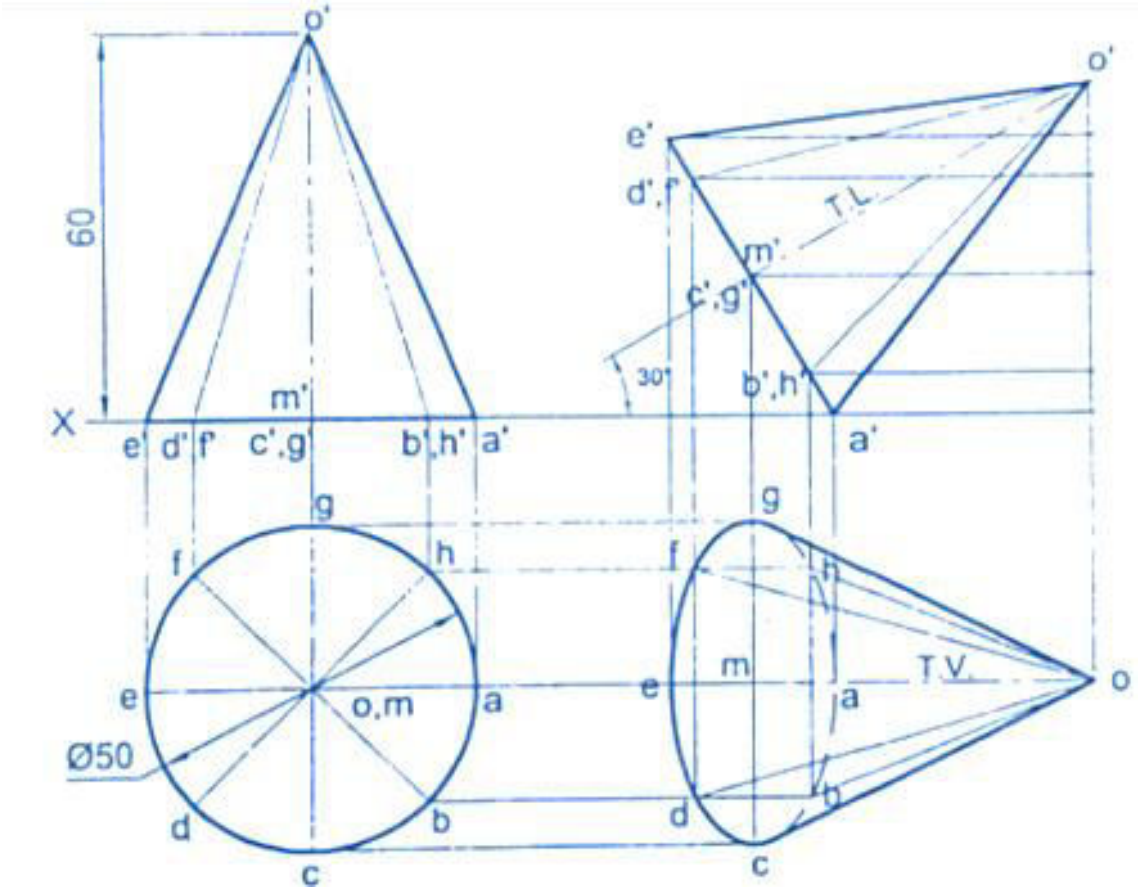

Problem:4

A Cylinder of base diameter 50 mm, 70 mm long resting on the ground with its axis making an angle of 50° with HP. Its axis parallel to VP. Draw its projections.

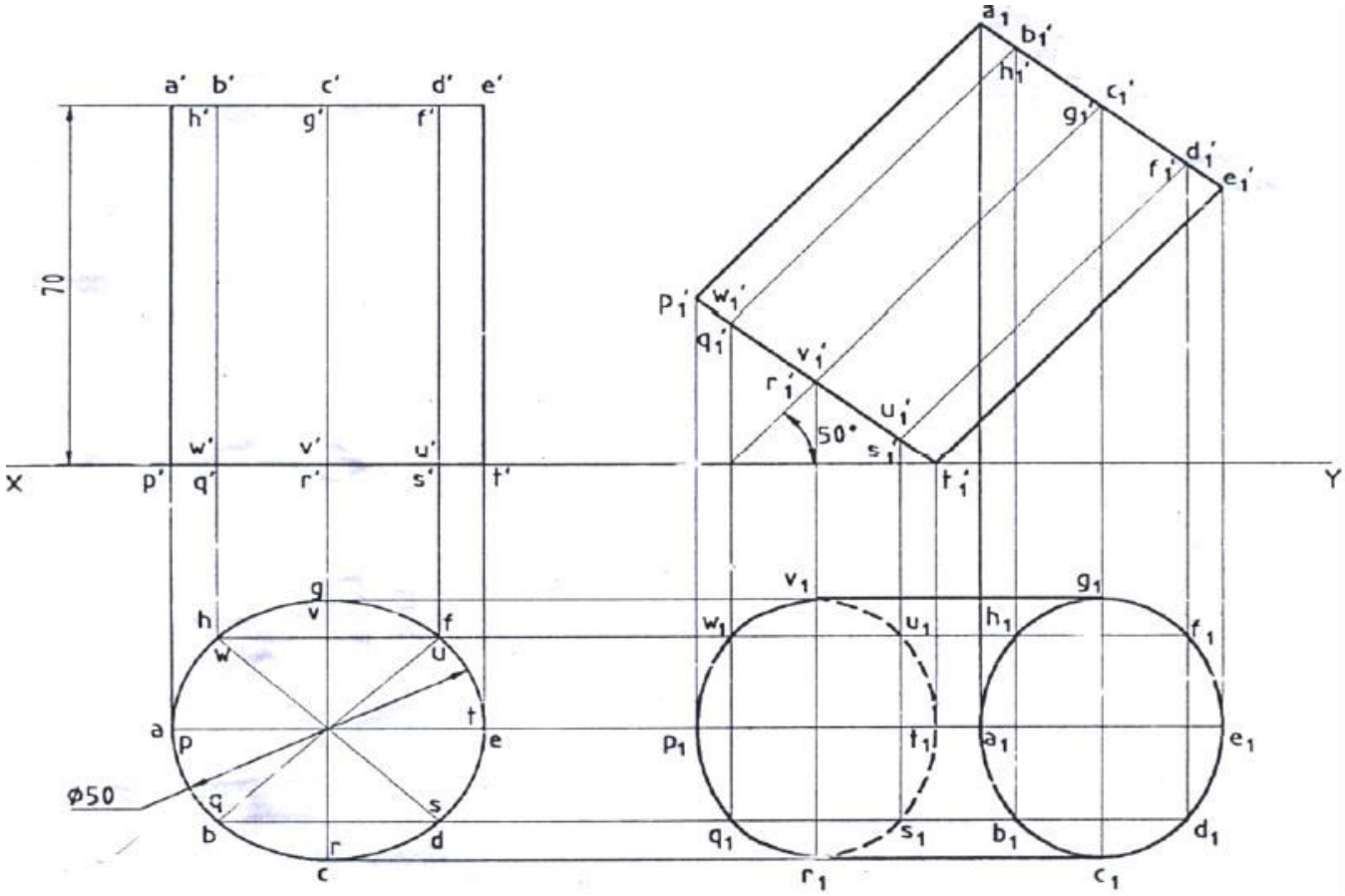

5) Axis inclined to VP and parallel to HP

- *Draw the Object shape in Elevation*
- *Draw the plan*
- *Tilt the plan to the given angle*
- *Redraw the elevation*

Problem:1

A pentagonal prism of base side 30mm and axis length 60mm is resting on HP on one of its rectangular faces with its axis is inclined at 40º to VP. Draw its projections.

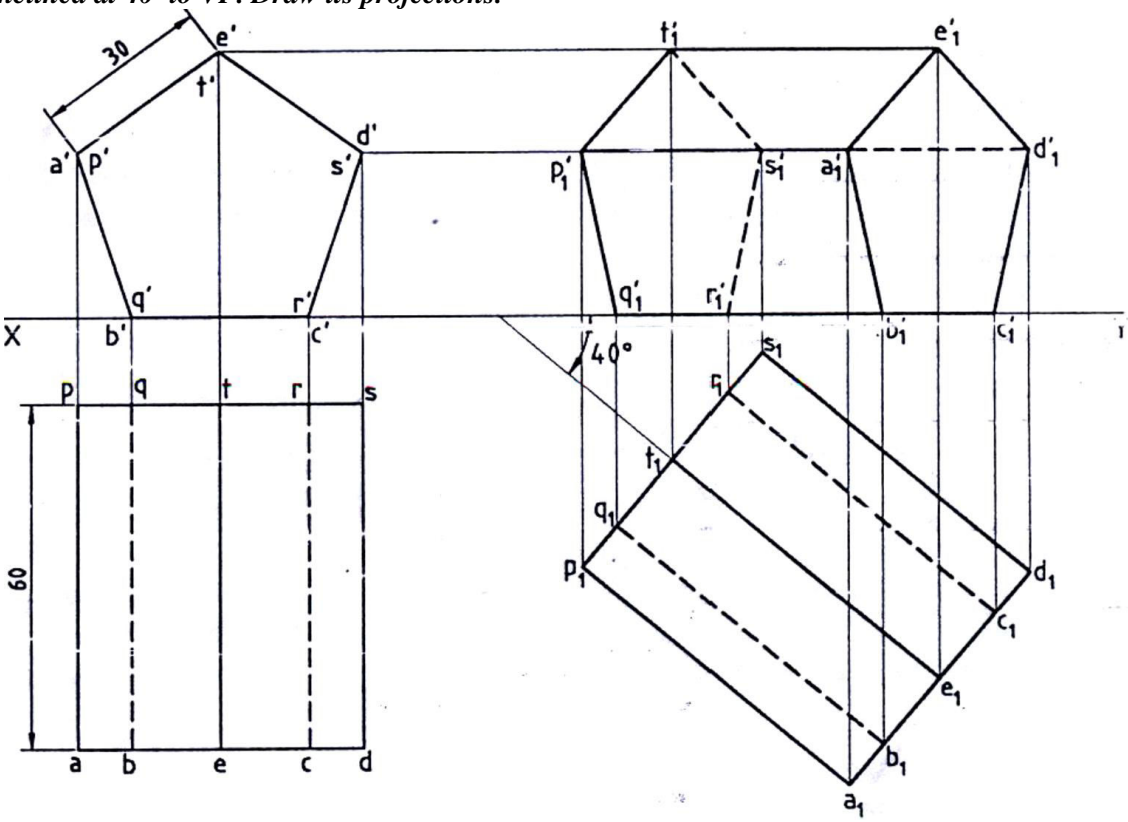

Problem:2

An Hexagonal Prism, having a base with a 30 mm side and 65 mm long axis, has an edge its base in the VP Such that the axis is inclined at 30º to the VP and Parallel to the HP. Draw its Projections.

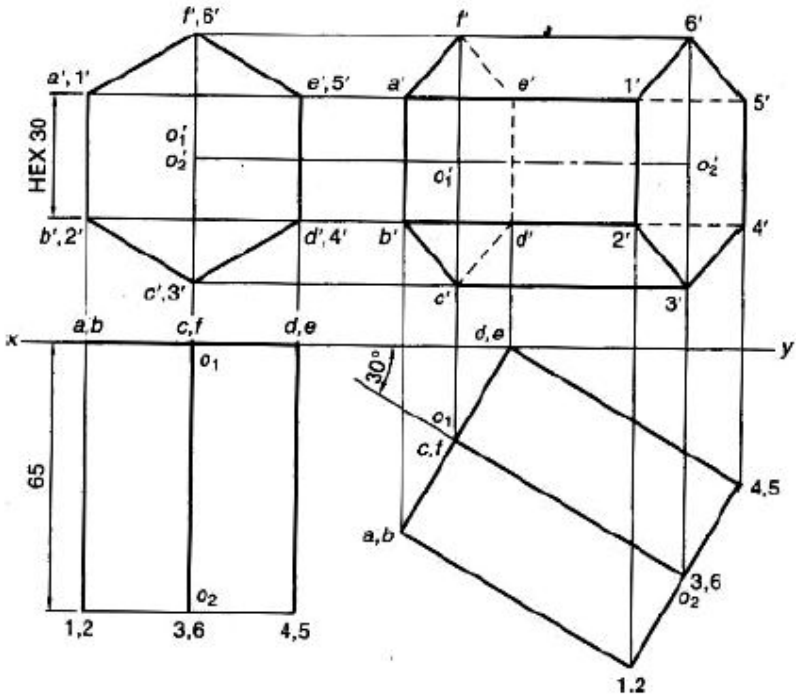

Problem:3

A Cylinder of base diameter 35 mm, 55 mm long resting and its axis making an angle of 50° with VP. Its axis parallel to HP. Draw its projections.

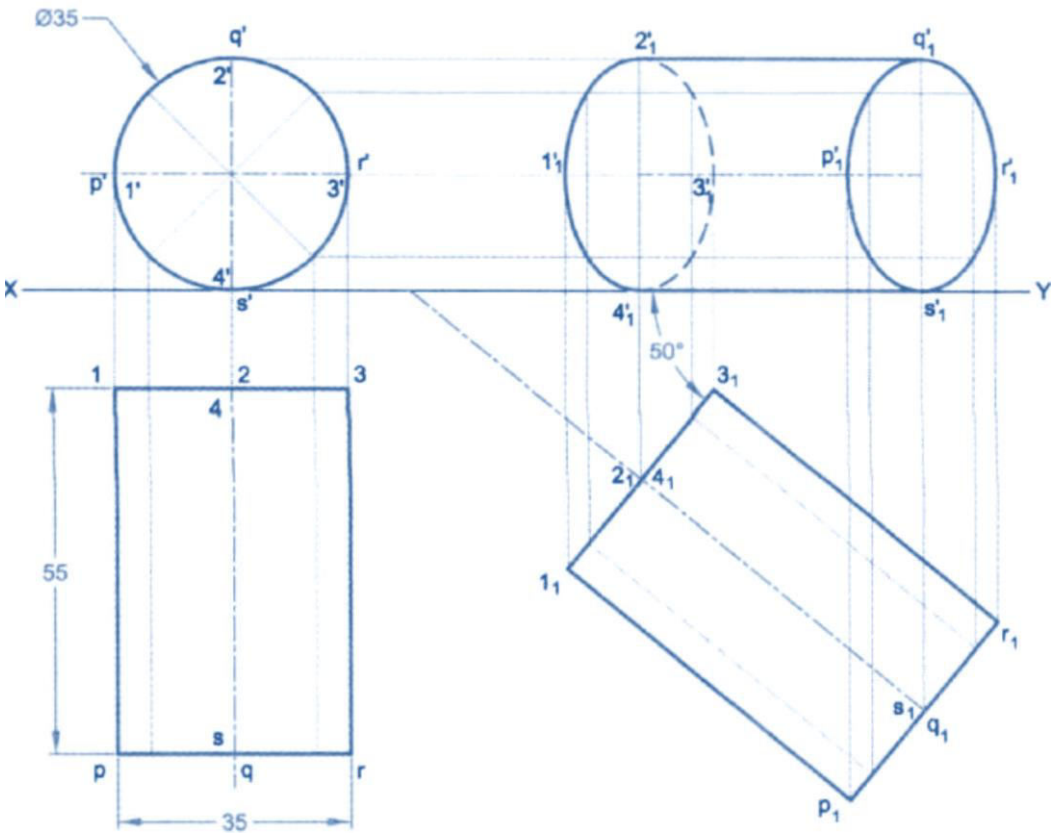

2.2.2 Section of Solids

Introduction:

Section of solids:

It is necessary to show the inner details of an object for the better understanding, by showing in dashed lines.

Section:

The surface produced when a section plane cuts a solid.

Section Plane:

The imaginary plane by which the object is cut is called the section plane. The line type to represent this section line in the view is a thin chain line thick at the ends.

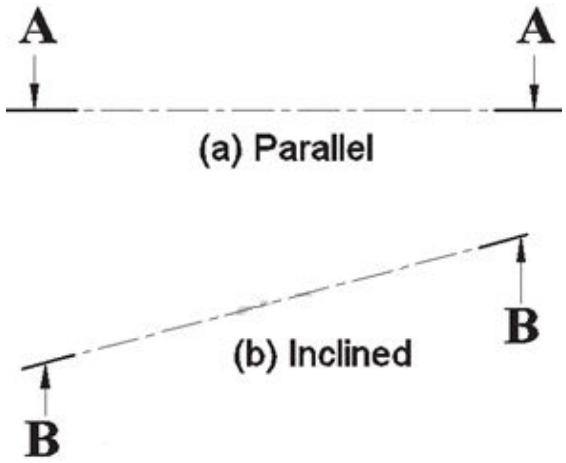

Sectional View:

The projection of the section along with the remaining portion of the object is called sectional view.

True Shape:

The sectional view obtained on a plane parallel to the sectional plane is called the true shape of the section.

Apparent section:

The section obtained on a plane of projection of a cut object when the section plane is not parallel to the plane of projection is called apparent section.

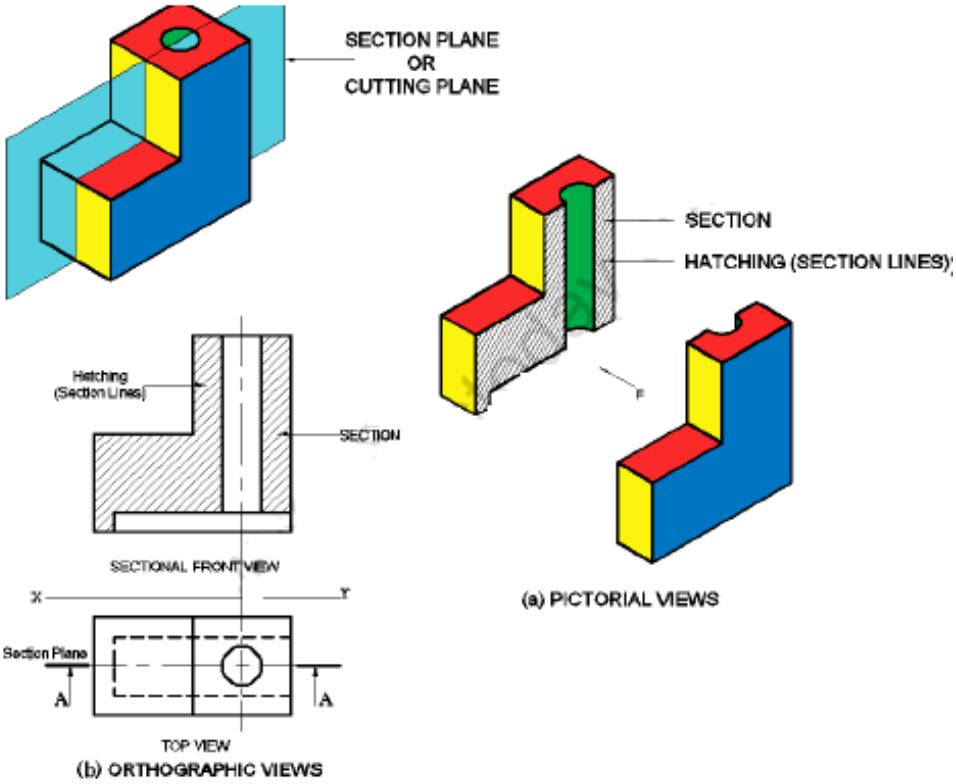

Need / Uses of Sections

We have come to know why sections are needed. Let us know some more details which are as follows :

- Sectioning helps the engineers/technicians considerably in clarifying the interior details (solid, hollow, etc.)
- These details are otherwise quite complicated to be shown & dimensioned by outside views & hidden lines.

Hatching lines / Section Lines

The sectional surfaces are'hatched', i.e. continous thin parallel lines are drawn with equal spacing, (say 1-3 mm), minimum being 0.7 mm as per BIS SP : 46 – 2003 (Revised) specification. These lines are called as "section lines". They are drawn at 45° to the "principal outlines" or "lines of symmetry of the sections", as shown in the Fig.

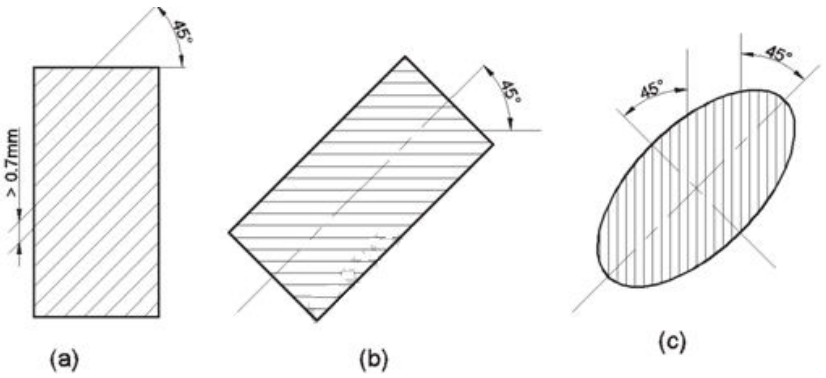

While hatching the following points should be taken care of :

Hatching shall be interrupted when it is not possible to place inscriptions (i.e. dimensions or text), outside the hatched areas as shown in the Fig. below,

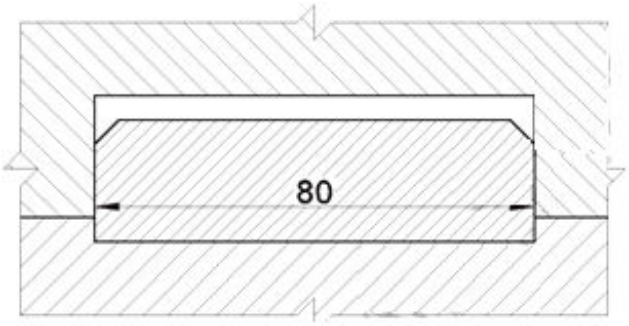

Separate areas of a section of the same component shall be hatched in an identical manner. Various ways of hatching are shown in Fig. Adopt the correct method for a neat, precise and clear drawing.

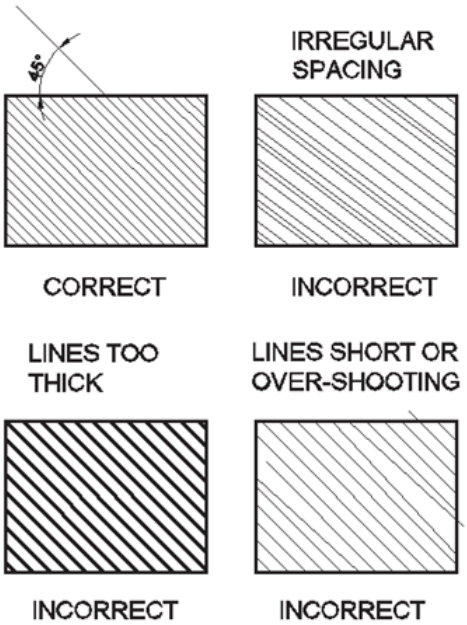

Sectional Front View / Sectional Elevation & Sectional Top view / Sectional Plan

The cutting plane is indicated in a view adjacent to the sectional view.

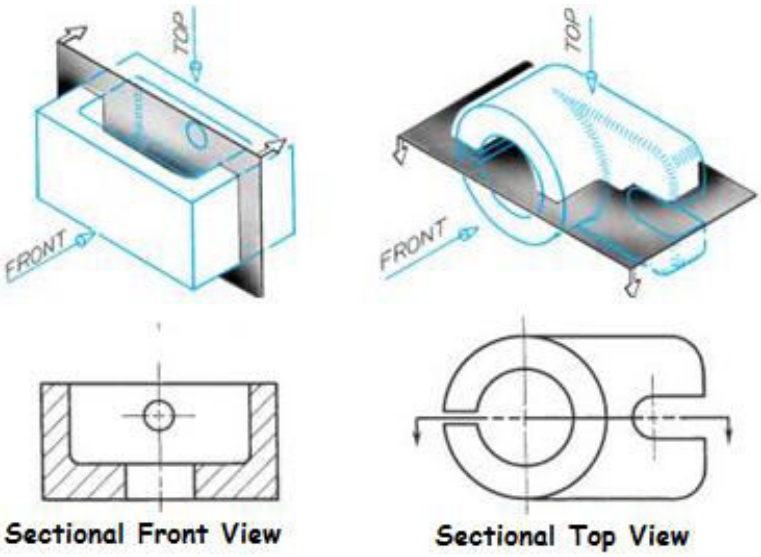

Condition:

1) Section plane perpendicular to VP and parallel to HP.

2) Section plane perpendicular to VP and inclined to HP.

3) Section plane perpendicular to HP and parallel to VP.

4) Section plane perpendicular to HP and inclined to VP.

1) Section plane perpendicular to VP and parallel to HP

The section plane is represented as a line in the "Front View" and the sectional view is obtained in the Top View.

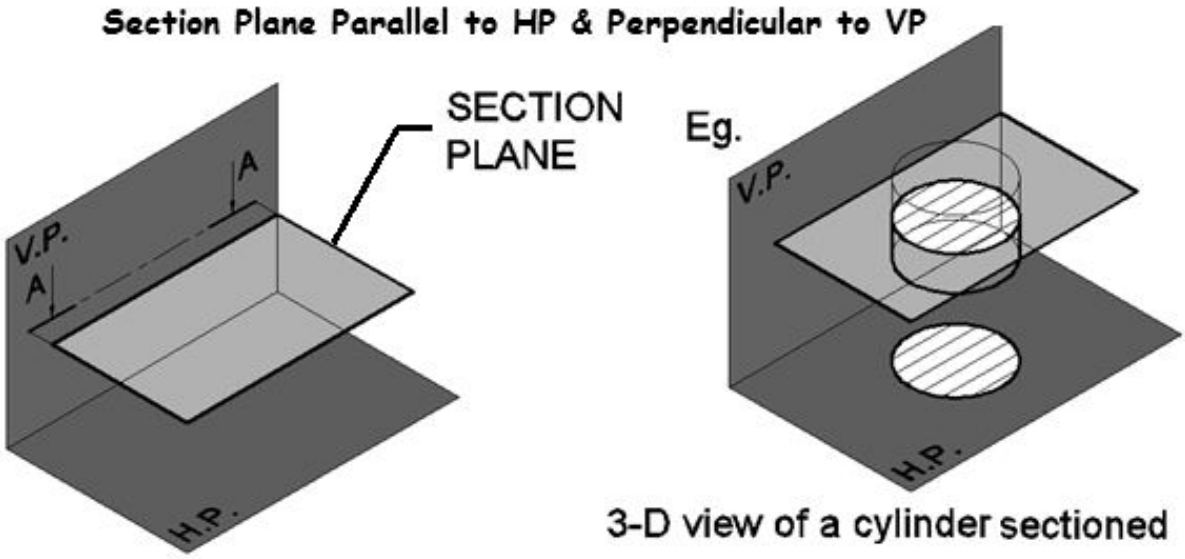

Example 1 :

A cube of 40 mm side is cut by a horizontal section plane, parallel to HP at a distance of 15 mm from the top end. Draw the sectional Top View and the Front View.

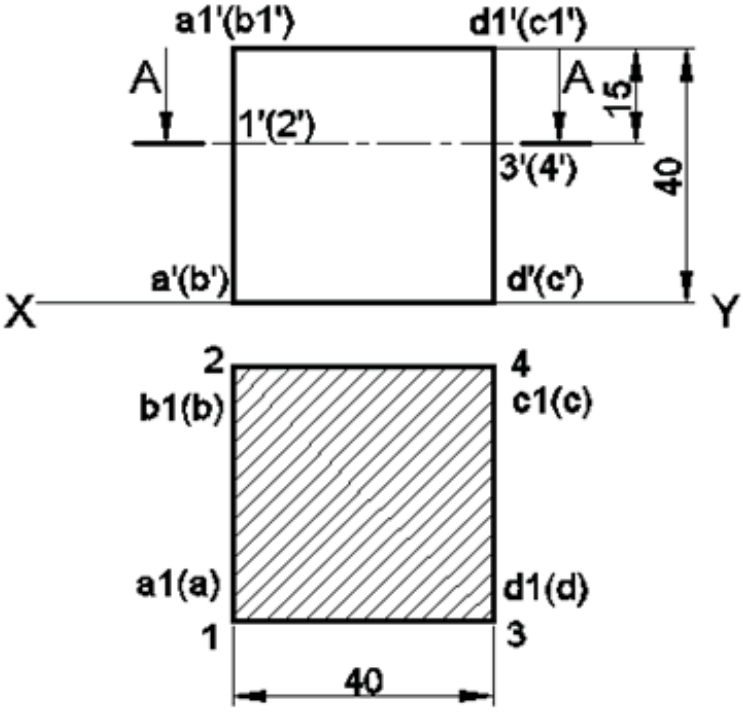

Solution :

1. Draw the Top View and Front View as shown.
2. In the Front View, draw the section plane parallel to X - Y line (HP) at a distance of 15 mm from the top edge a1' –d1'.
3. Locate points of intersection (POIs), pts. 1', 2' , 4' & 3' cutting edges a'a1', b'b1', c'c1' and d'd1' as shown pictorially
4. Project these pts. on their corresponding edges in the Front View. (Here they are the corners of the square itself.)
5. The points 1, 2, 3, 4 are already joined. Now hatch the area.

Example2:

A triangular prism with base side 40 mm and length of axis = 65 mm is resting on its rectangular face on HP with axis perpendicular to V.P. The prism is cut by a horizontal section plane, 20 mm distance above the ground. Draw the Front View and sectional Top View.

Solution :

1. Draw the Front View and Top View as shown in the given position.

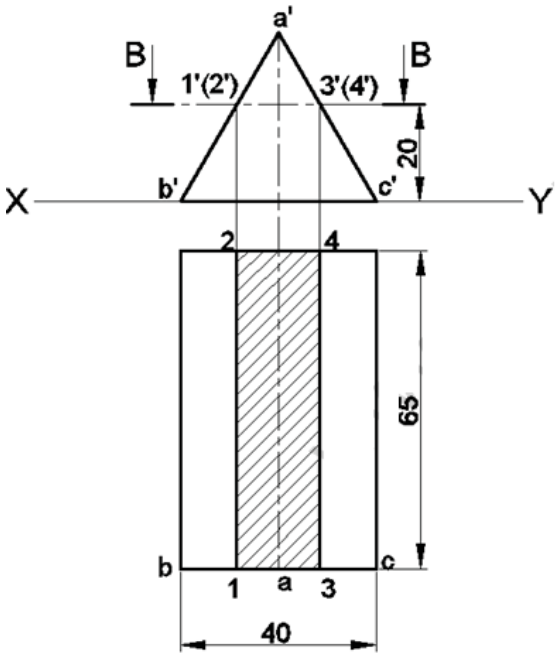

Solution :

1. Draw the Front View and Top View as shown in the given position.
2. In the Front View, draw the section plane B-B at a distance of 20 mm from X-Y line and parallel to it.
3. Locate the point of intersections point 1' cutting front edges a'b' and the edges of the triangular face at the back at 2'. Similarly 3' and 4'.
4. Project these points on their corresponding edges in the Top View.
5. Join the points 1, 2, 4, & 3 and hatch the area.

Example 3:

A hexagonal pyramid is resting on its base on the ground with two of its base edges of length 30 mm, parallel to HP. A horizontal section plane, bisects the 80 mm long axis. The axis is perpendicular to H.P. Draw the Front View and sectional Top View.

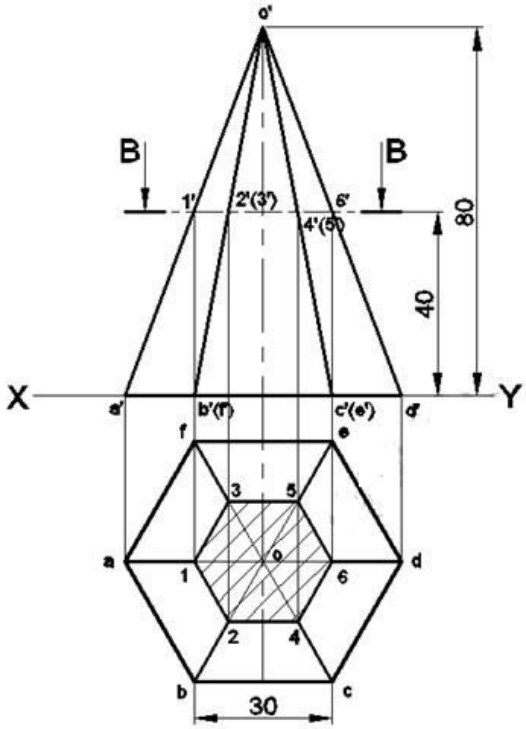

Solution :

1. Draw the Front View and Top View as shown in the given position.
2. In the Front View, draw the section plane B-B passing through the mid-point of the axis 0' 01' as shown.
3. Locate the POIs 1', 2'-3', 4'-5', 6' cutting the edges o'a', o'b', o'f', o'c', o'e' & o'd' respectively.
4. Project these points on their corresponding edges in the Top View.
5. Join the points 1,3, 5,6, 4, 2 to form the outline of the section and hatch the area.

2) **Section plane perpendicular to VP and inclined to HP.**

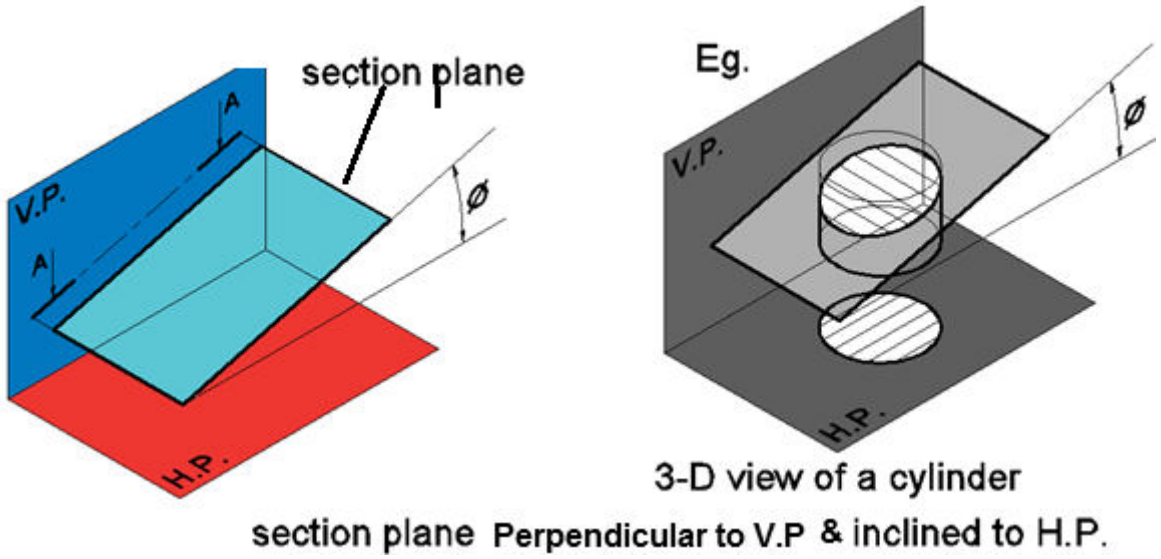

Example: 1

A cylinder of base diameter 45 mm and height 65 mm rests on its base on HP. It is cut by a plane perpendicular to VP and inclined at 45° to HP. The cutting plane meets the axis at a distance 15 mm from the top base. Draw the sectional plan and true shape of a section.

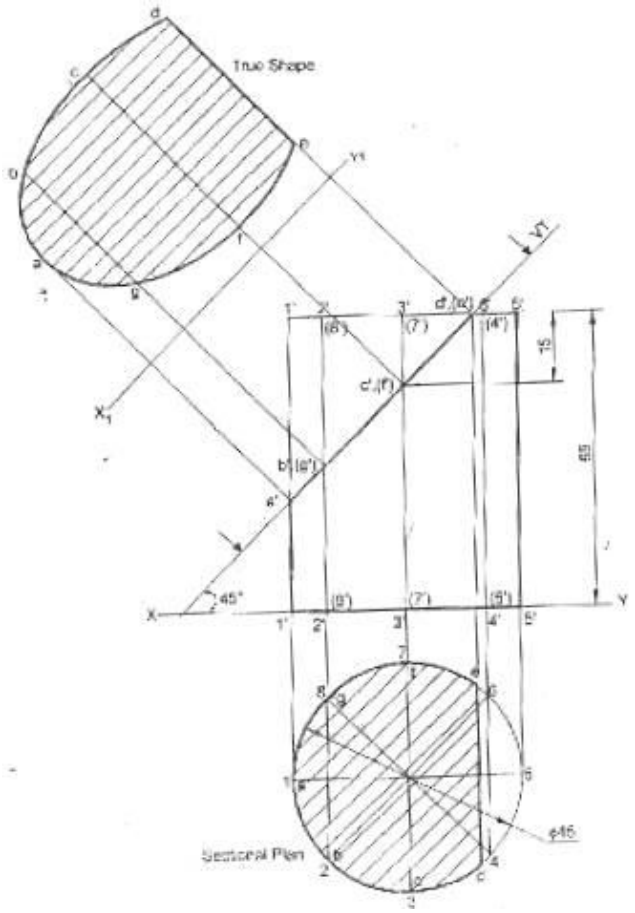

Solution :

1) Draw the projections of the solid as shown.
2) In the Front View, draw the section plane F-F making an angle of 45° with X-Y line and passing through the centre.
3) Locate the POIs 1', 2', 3',4' in Front View cutting the circular faces.
4) Project these pts. on their corresponding edges in the Top View.
5) Join these points 1'-2'-4'-3' and hatch the area.
6) Draw the remaining portion. In this case, some portion of the solid is removed and lies outside the section, so it is represented by "dashed and double dotted lines."

Example : 2

A hexagonal pyramid of base side 20 mm and axis 60 mm is lying on the ground with its base with a base edge parallel to the VP. It is cut by a plane, perpendicular to the VP, inclined at 60° to the HP and cuts the axis at a point 25 mm from the base. Draw the sectional plan and true shape of the section.

Solution :

1. Draw the Front View and Top View in the given position as shown.
2. Draw line V-T in the Front View meeting the midpoint of edge 'a-b' and inclined at 60° to HP.
3. Locate the POIs 1' 2', 3',4',5',6' cutting edges a'-c', o'-a' & a'-b' respectively.
4. Project these pts. on their corresponding edges in the Top View.
5. Join pts. 1, 2, 3, 4,5,6 and hatch the area.
6. Draw the remaining portion as mentioned in the earlier e.g. to get the sectional view.

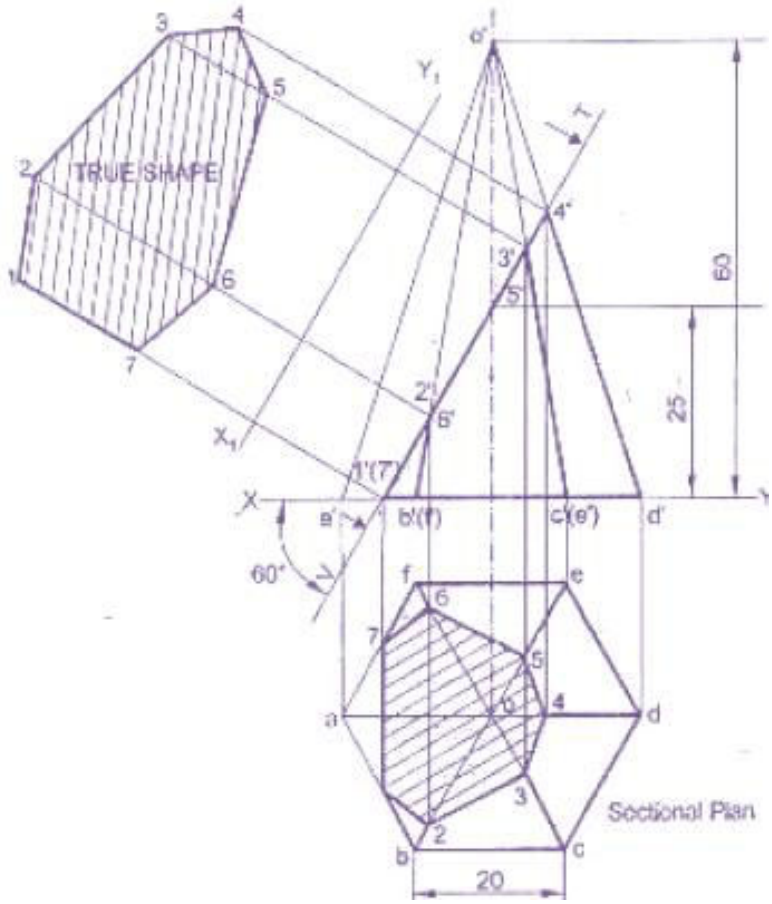

Example : 3

A cone of 60 mm diameter base and axis of length = 80 mm is resting on its circular face on H.P. It is cut by a section plane inclined at 45° to HP and bisects the axis. Draw the sectional Top plan & True shape.

Solution :

1. Draw the Top View and Front View as shown.
2. Mark midpoint, 40 mm of apex o' in the Front View and draw a 45° inclined section plane D-D passing through it.
3. Locate POIs 1' & 2', meeting generators o'a' & o'b', in Front View and project them in the Top View on diameter a-o-b. (It can be seen that they don't have edges & more points need to be located to get the shape of the section)
4. Hence, divide the section plane into equal parts say 4 pt. and draw lines parallel to the base passing through these points These lines represent Circle A, B & C and their respective POIs with section plane are 3'-4', 5'-6' & 7'-8'.
5. Find the width of the lines draw in the earlier step and taking them as diameters, draw circles A, B & C in the Top View.
6. Project the POIs in the Top View, meeting the circles A, B & C at points 4, 3; 6,5 & 8, 7 respectively.
7. Join pts. 1, 4, 6, 8, 2, 7, 5, 3 as a curve. (As in this case, the section plane is cutting a curved surface.) Section the area.

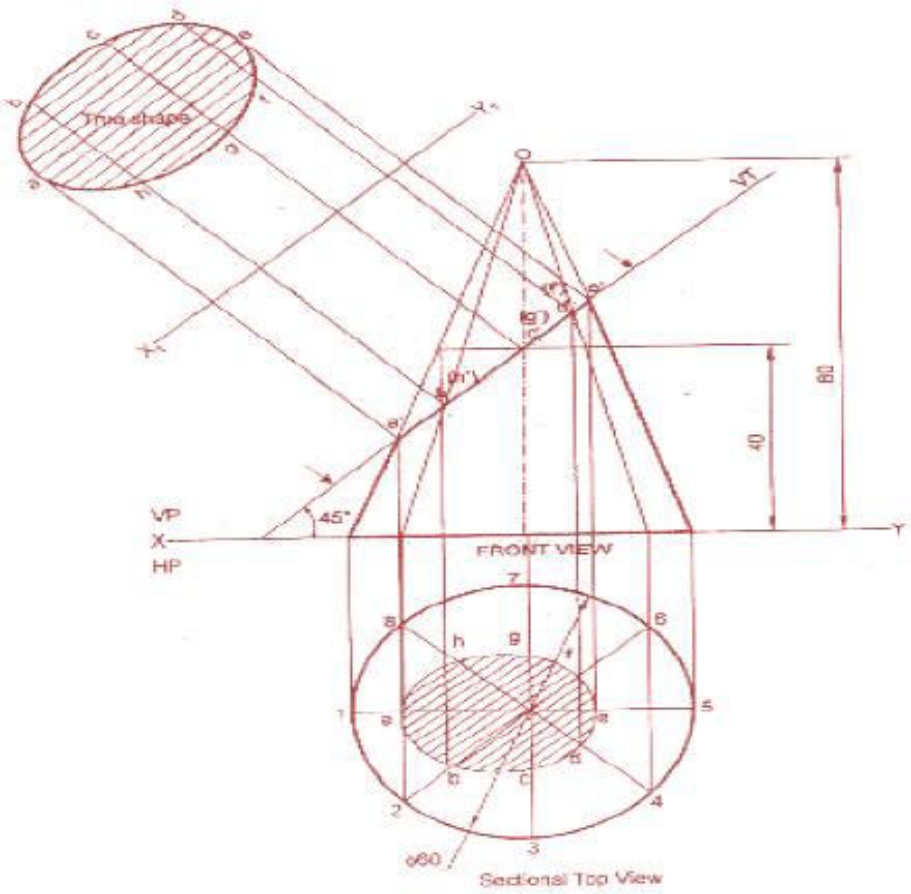

3) Section plane perpendicular to HP and parallel to VP

The section plane is represented as a line in the "Top View" and the sectional view is obtained in the Front View.

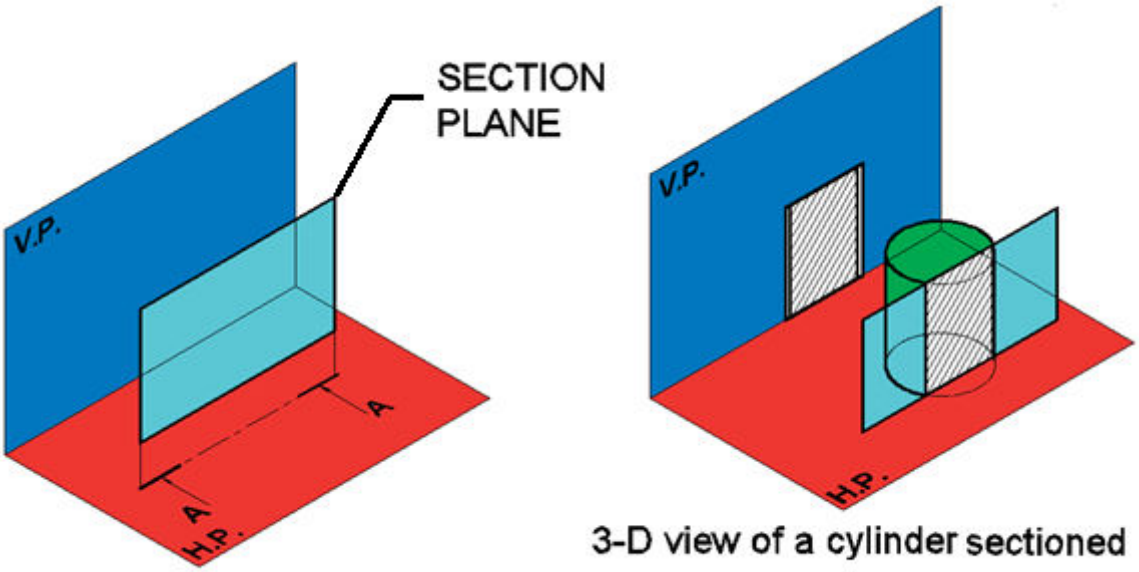

Section Plane Parallel to VP & Perpendicular to HP

Example: 1

A cube of side 35mm rests on HP with one of its face inclined at 45° to VP. A section plane parallel to VP cuts the cube at distance of 10mm from the centre point. Draw the top and sectional front view.

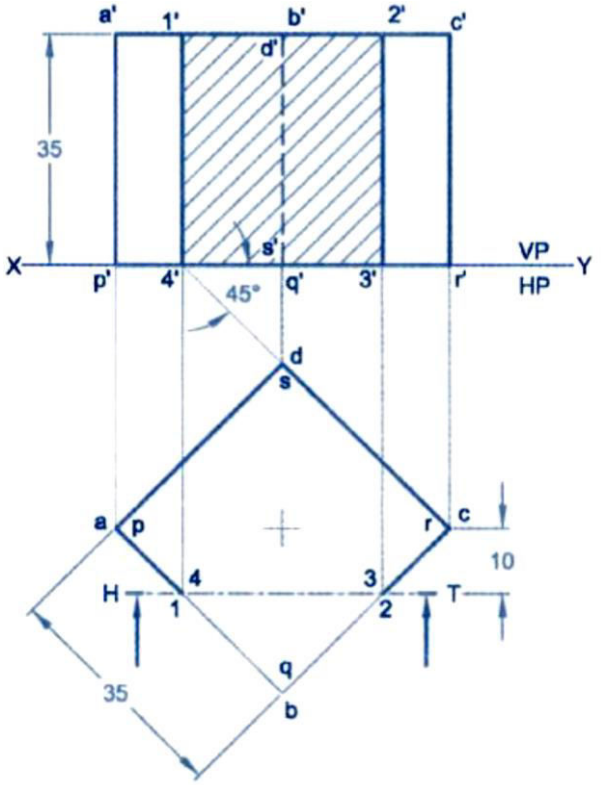

Example: 2

A cone of base diameter 40 mm is resting on HP and its 50 mm long axis perpendicular to HP. It is cut by a section plane perpendicular to HP and parallel to VP, at a distance of 10 mm from the front. Draw the Top View and sectional Front View.

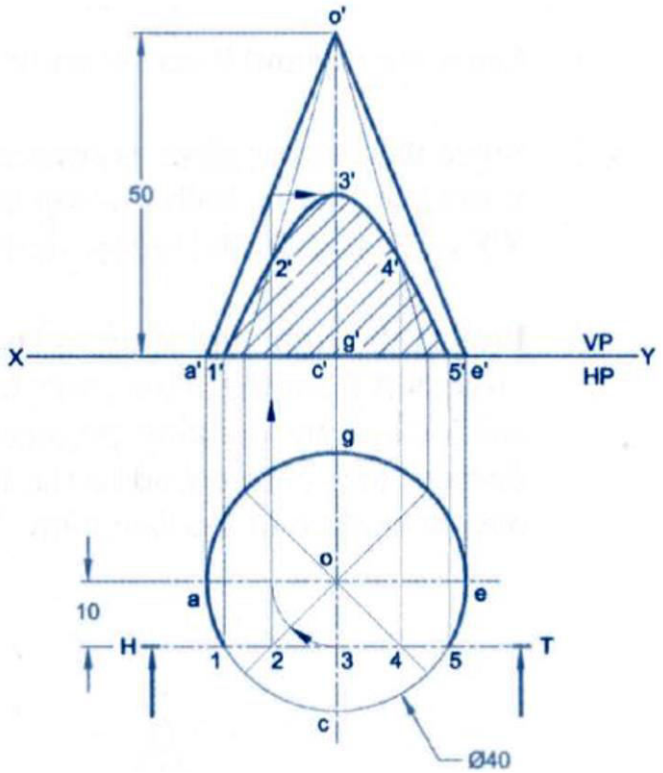

Solution :

1. Draw the Front View and Top View as shown.
2. Draw the section plane A-A, parallel to X-Y line and 10 mm from point C.

3. Locate the POIs 1, 2 intersecting the circular base.
4. So draw some concentric circles, Circle A (innermost) such that section plane is tangential to it, and another Circle B and project these circles as lines in Front View.
5. Locate points 3, 4 and 5 cutting the circles A & B and project all the POIs in the Top View.
6. Join all the points 1', 3', 4', 5' and 2' as a curve and section the area.

4) Section plane perpendicular to HP and inclined to VP

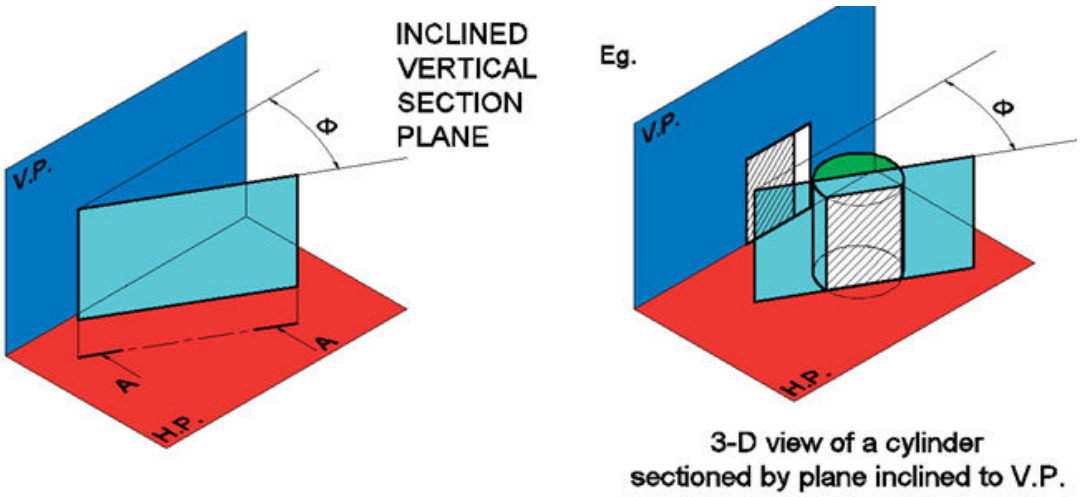

Example: 1

A cylinder of base diameter 50 mm and axis length 60 mm is resting on HP on one of its generators with its axis perpendicular to VP. It is cut by a plane inclined 35° to VP and perpendicular to HP and is bisecting the axis of the cylinder. Draw its top view, sectional front view and true shape of the section.

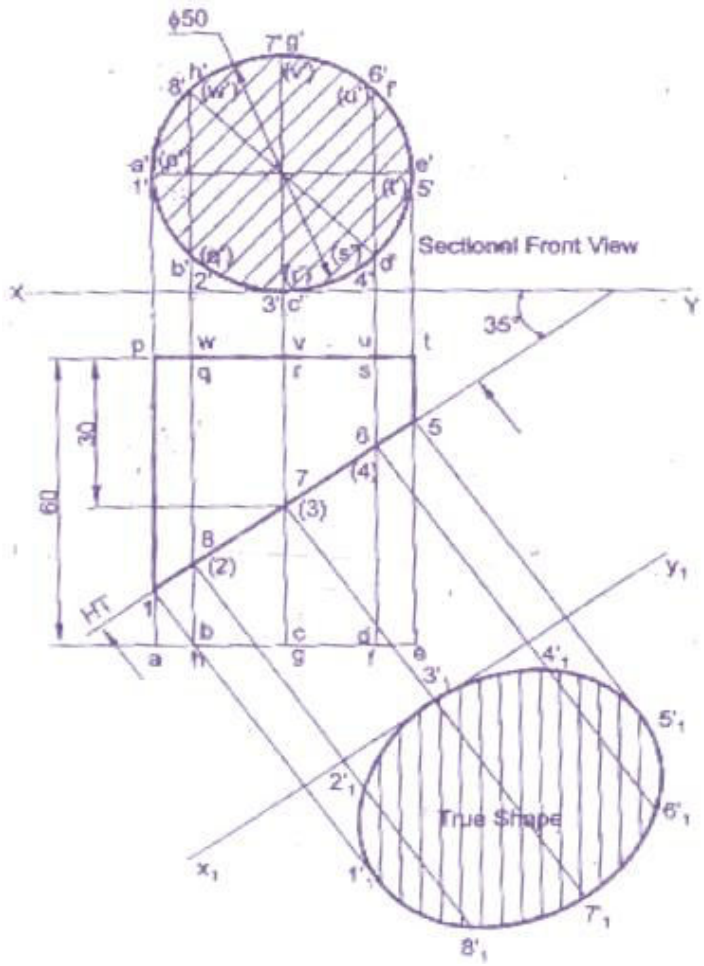

Example: 2

A hexagonal prism of base 25 mm axis 50 mm is resting on HP on its base with a base side parallel to VP. It is cut by a plane inclined at 50° to VP and perpendicular to HP and is 10 mm away from the axis. Draw its sectional front view and true shape of the section.

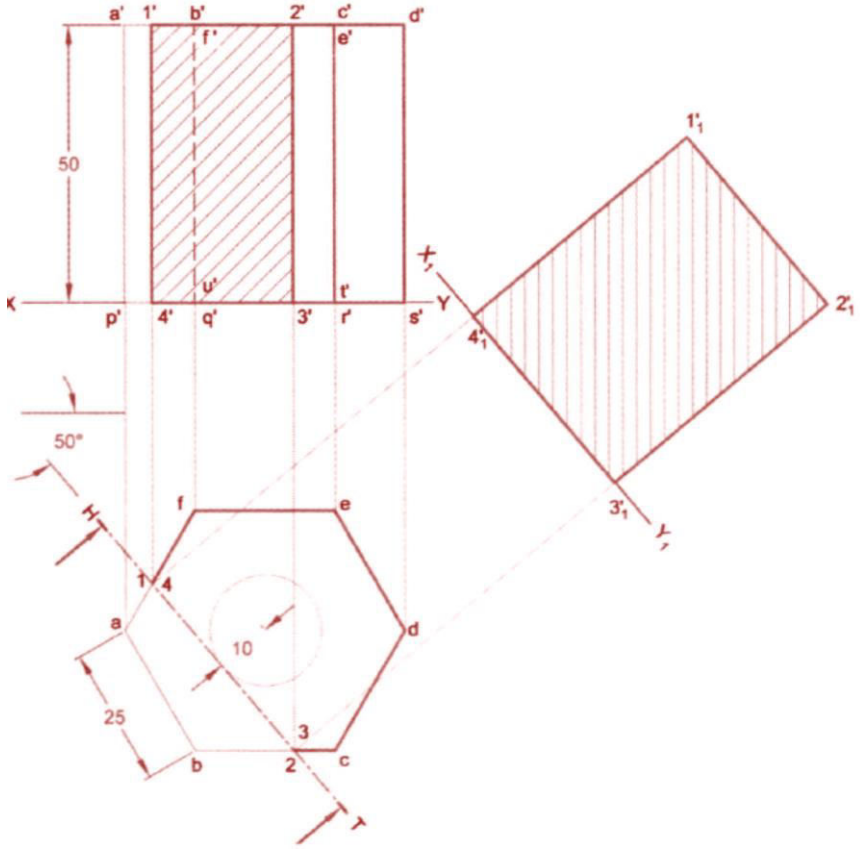

Example: 3

A pentagonal pyramid of base 25 mm axis 60 mm is resting on HP on its base with a base side parallel to VP. It is cut by a plane inclined at 45° to VP and perpendicular to HP and is 8 mm away from the axis. Draw its sectional front view and true shape of the section.

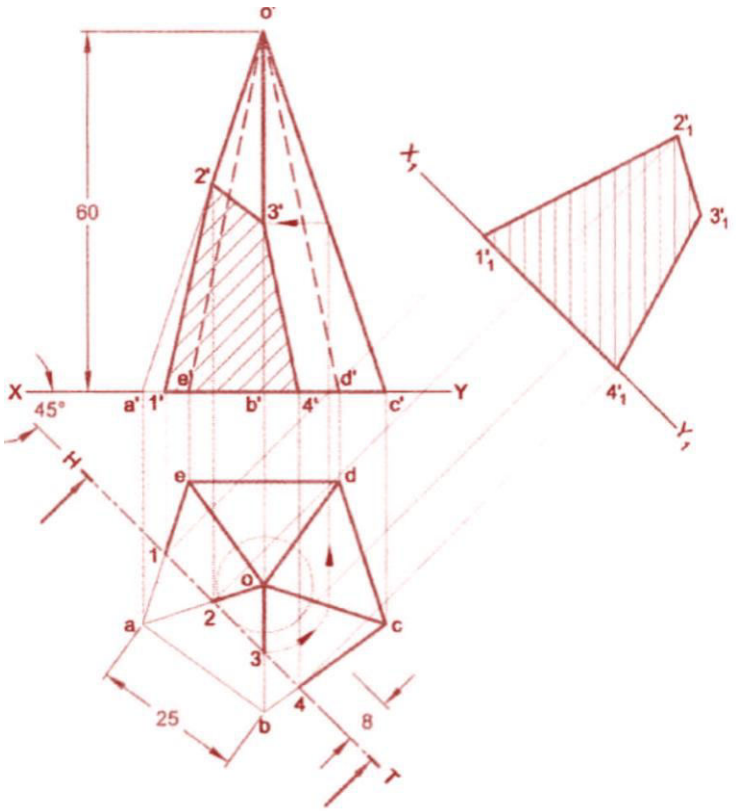

Example: 4

A cone of base diameter 50 mm and axis length 60 mm is resting on HP on its base. It is cut by a plane inclined at 40° to VP and perpendicular to HP that cuts the cone at distance of 10 mm from axis and in front of it. Draw its top view, sectional front view and true shape of the section.

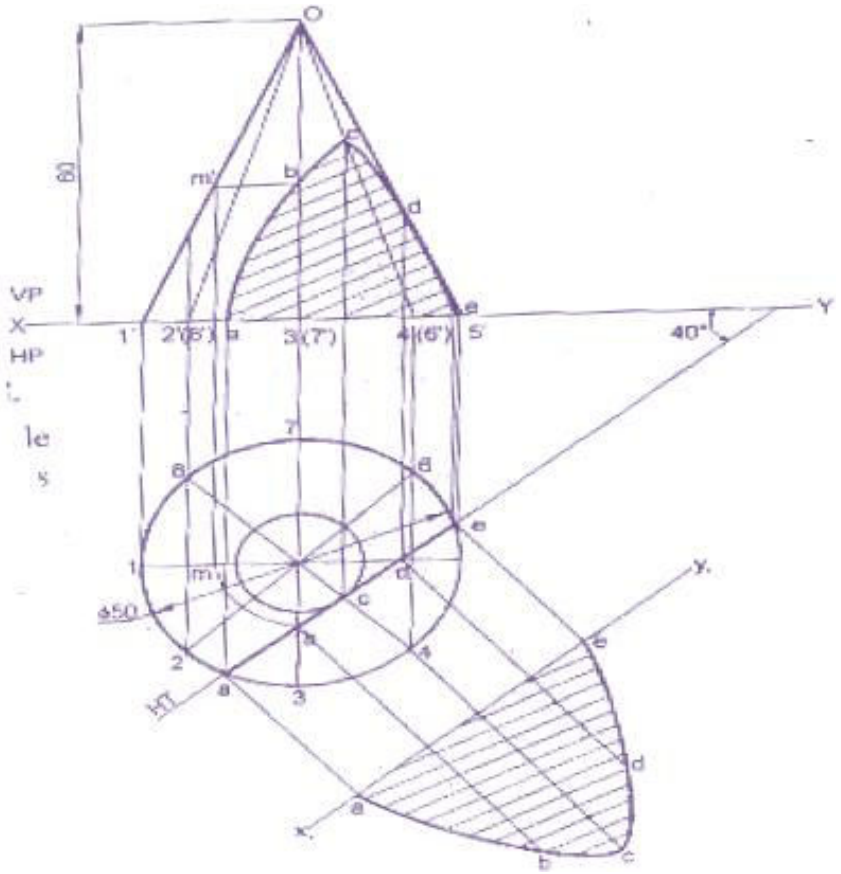

PROJECTION OF SOLIDS - EXCERCISES

1. Draw the projection of a cube of side 40mm is resting on the HP with one of its face parallel to VP.

2.Draw the projection of hexagonal prism of side base 30mm and axis 75mm long rest on ground by its above of its vertical face is parallel to VP.

3. Draw the projection of hexagonal prism of side base 30mm and axis 75mm long rest on ground by its base one of its vertical face is parallel to HP.

4.Draw the projection of a cylinder of base Diameter 40mm and axis 75mm long its base is 15mm above HP and axis Parallel to VP.

5. Draw the projection of a circular cone of base 40mm diameter and height is 70mm and its axis is resting on HP.

6. Draw the projection of a cylinder of base diameter 50mm and axis is 80mm one of the base is on the VP and axis perpendicular to VP.

7. Draw the projection of a hexagonal pyramid with base side of 25mm and height is 80mm and the base is resting on VP. One of the base side is parallel with HP and axis Parallel to HP.

8. Draw the projections of a cylinder of base diameter 42mm and axis 85mm lying on the ground and its axis parallel to both HP and VP.

9. Draw the projection of the hexagonal pyramid of base 25mm and axis 90mm resting or one of its base edge on the ground, when the axis is parallel to both VP and HP.

10. Draw the plan and elevation of a hexagonal prism of side 30mm and height 65mm standing on it base, it's axis is inclined at 60^0 to HP and parallel to VP

11. A cone with base diameter 40 mm and axis 75mm length lying on the ground. The axis parallel to VP and inclined 30^0 to HP. draw its projection.

12. Draw the plan and elevation of hexagonal pyramid base 35mm side and axis 60mm long is resting on HP with one of this corner HP with one of its corner and axis inclined at 60^0 to VP and parallel to HP.

13. Draw the projection of a cone of base diameter 40mm and altitude 70mm resting on the HP with a point and its axis inclined at 45^0 to VP and parallel to HP.

SECTION OF SOLIDS - EXERCISES

1. A hexagonal prism of base side 30mm and axis 60mm long is resting on HP on its base sides being Perpendicular to VP. It is cut by a plane perpendicular to VP and Parallel to HP and 10mm above HP. Draw its elevation and sectional plan.

2. A triangular pyramid of base side 30mm and axis 70mm long is resting on its base on the HP with one of its base side is parallel to VP. A section plane perpendicular to VP and Parallel to HP and 20mm above the HP. Draw its elevation and sectional plan.

3. A hexagonal pyramid of side base 20mm and axis 70mm long is resting on its base sides being parallel to VP. It is cut by a plane perpendicular to VP and parallel to HP and 30mm below the apex. Draw its elevation and sectional plane.

4. A triangular pyramid, of base side 30mm and axis 70mm long is resting on its base edge parallel and nearer to VP. A section plane perpendicular to HP and Parallel to VP cuts the pyramid at a distance of 10mm from the corner of the base nearer to the observer and the plan. Draw the plan and sectional elevation.

5. A hexagonal pyramid side of base 30mm and axis 70mm long rest with its base on the HP. Such that one of the base edges of the base is parallel to VP. A section plane perpendicular to HP and parallel to VP cuts the pyramid of a distance of 10mm from the apex. Draw the plan and sectional elevation.

6. A cylinder of diameter 40mm and 80mm height stands vertically with its base on HP. It is cut by a sectional plan perpendicular to HP and Parallel to VP at a distance of 10mm from the axis nearer to the observer. Draw the plan and sectional elevation.

7. A cone of base diameter 30mm and axis 80mm long is resting on its base of HP. It is cut by a section plan parallel to HP and perpendicular to VP so that it bisects the axis. Draw the elevation and sectional plan.

8.A hexagonal prism of base edge 40mm and 100mm height is resting on ground with its axis perpendicular to HP and parallel to VP. Two of its edges are parallel to VP. It is cut by a section plan perpendicular to VP and inclined at 45^0 to HP and passes through a point on the axis 70mm from the base. Draw the elevation , section plan and true shape of section.

9. A hexagonal pyramid of base side 25mm and axis 55mm long rests on its base on HP with two base perpendicular to VP. It is cut by a plane perpendicular to VP and inclined at 30^0 to HP meeting the axis at 20mm from the vertex. Draw the elevation section plan and true shape of the section.

10. A cylinder of diameter 40mm and height 50mm rest on its base on the HP. It is cut by a plane perpendicular to VP and inclined at 50^0 to the HP. The cutting plane meets the axis at a distance of 15mm from the top. Draw the front view and true shape of the function.

12.A triangular prism of base edge 40mm and axis 60mm long rest on its base on the HP with one of its base edge is parallel to VP. It is cut by plane inclined at 30^0 to VP at a distance of 7.5mm from the axis . Draw its plan sectional elevation and true shape of the section.

13.A hexagonal prism of base side 20mm and height 40mm rests on the HP on one of its ends with two rectangular faces parallel to VP. It is cut by a plane perpendicular to HP and inclined 60^0 to VP at a distance 5mm from the axis. Draw its plan, sectional elevation and true shape of the section.

14.A right circular cone of base diameter 40mm and axis 60mm long rests on its base on the HP. It is cut by a plane perpendicular to HP and inclined 45^0 to VP. The shortest distance between the cutting plan of the axis 10mm. Draw the plan, Sectional elevation and true shape of the section.

UNIT-III DEVELOPMENT OF SURFACES

3.1 Development of surfaces:

- A layout of the complete surface of a three dimensional object on a plane surface is called its development or pattern.
- Development is a term frequently ***used in sheet metal work where it means the unfolding or unrolling of a detail into a flat sheet called a pattern.***

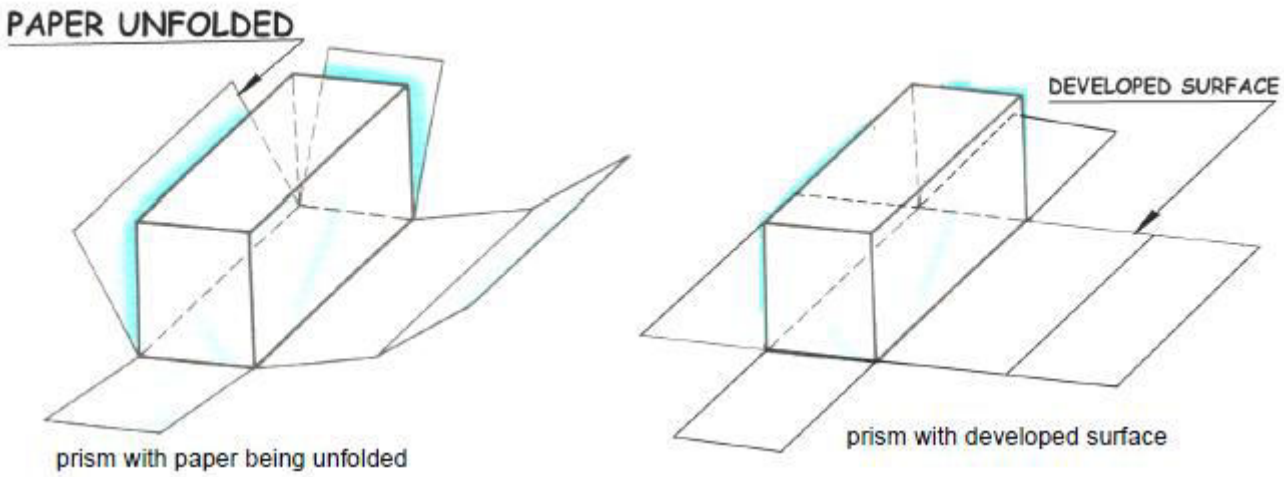

Meaning:

Assume object hollow and made-up of thin sheet. Cut open it from one side and unfold the sheet completely. Then the shape of that unfolded sheet is called **Development of lateral surfaces** of that object or solid. **Lateral surface** is the surface excluding solid's top & base.

3.2 Engineering application:

There are so many products or objects which are difficult to manufacture by Conventional manufacturing processes, because of their shapes and sizes. Those are fabricated in sheet metal industry by using Development technique. There is a vast range of such objects.

Examples:-

Boiler shells & chimneys, pressure vessels, shovels, trays, boxes & cartons, feeding hoppers, Large pipe sections, body & parts of automotives, ships, aero planes and many more.

Air duct

Funnel

Conical Flask

Transition piece

3.3 Methods of Development of surfaces:

1) Parallel line method - Cylinder & Prism

2) Radial line method – Cone & Pyramid

1. Parallel Line Method:

This method can only be used to develop objects (or parts thereof) having a constant cross-section for their full length, for example, prisms and cylinders and related forms.

Parallel lines, parallel to the axis of the detail, are shown on a view which shows them as their true lengths.

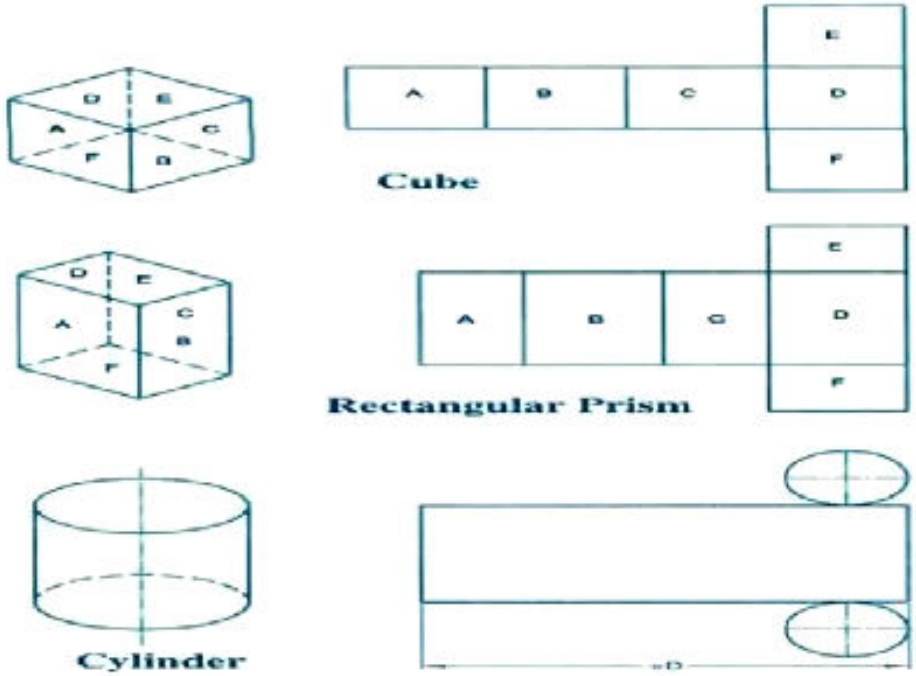

Examples for Parallel Line Development

2. Radial Line Method:

This method of development is used for right and oblique pyramids and cones. It employs radial lines which are slant edges from vertex to base comer points for pyramids, and radial surface lines on the cone surface from the vertex to the base.

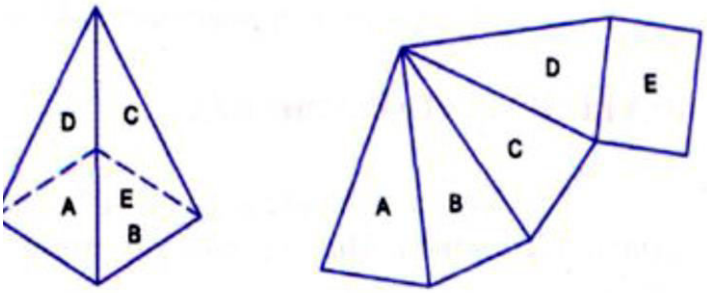

Square Pyramid

Development of Cones

The development of any right cone is a sector of a circle since the radial surface Lines are all of the same true length. The angle at centre of the sector depends on the base radius and the slant height of the cone. Let the radius of the base of the cone be **R,** the slant height of the cone be **L,** and the angle at the centre of the development be θ.

$$\theta = (\textit{Radius of the base circle / True slant length}) \times 360 = (R / L) \times 360$$

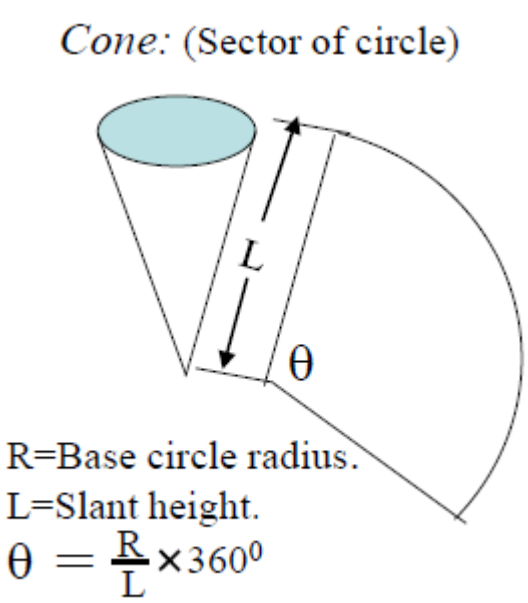

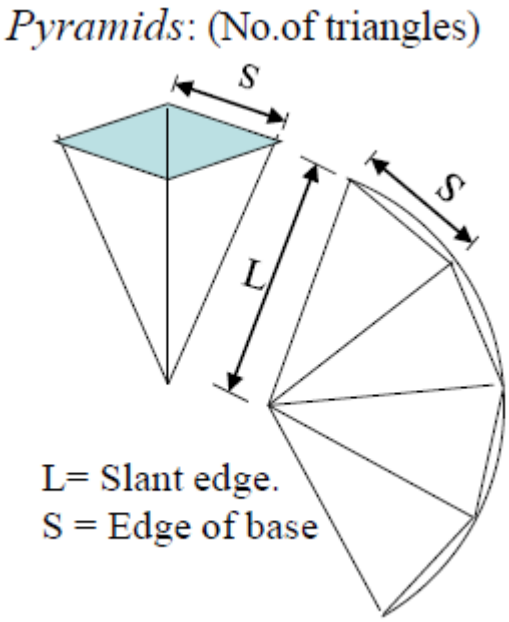

Development of Prism

Ex- 1

Draw the development of a square prism of side of base 30mm and height 50mm.

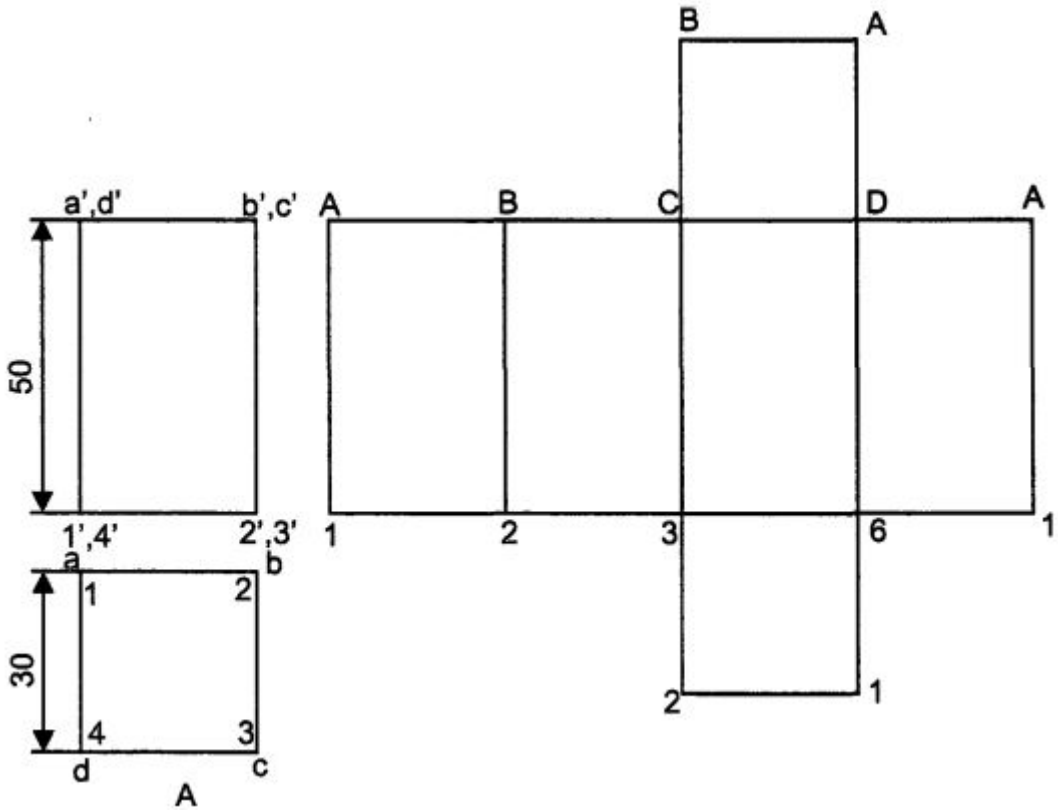

1. Assume the prism is resting on its base on H.P. with an edge of the base parallel to V.P and draw the orthographic views of the square prism.

2. Draw the stretch-out line 1-1 (equal in length to the circumference of the square prism) and mark off the sides of the base along this line in succession ie 1-2,2-3,3-4 and 4-1.

3. Errect perpendiculars through 1,2,3 etc., and mark the edges (folding lines) I-A, 2-B, etc., equal to the height of the prism 50 mm.

4. Add the bottom and top bases 1234 and ABCD by the side of an)' of the base edges.

Development of Cylinder

Ex- 2

Draw the development of a cylinder of base diameter D=30mm and height of 35mm

Figure shows the development of a cylinder. In this the length of the rectangle representing the development of the lateral surface of the cylinder is equal to the circumference (πd here d is the diameter of the cylinder) of the circular base.

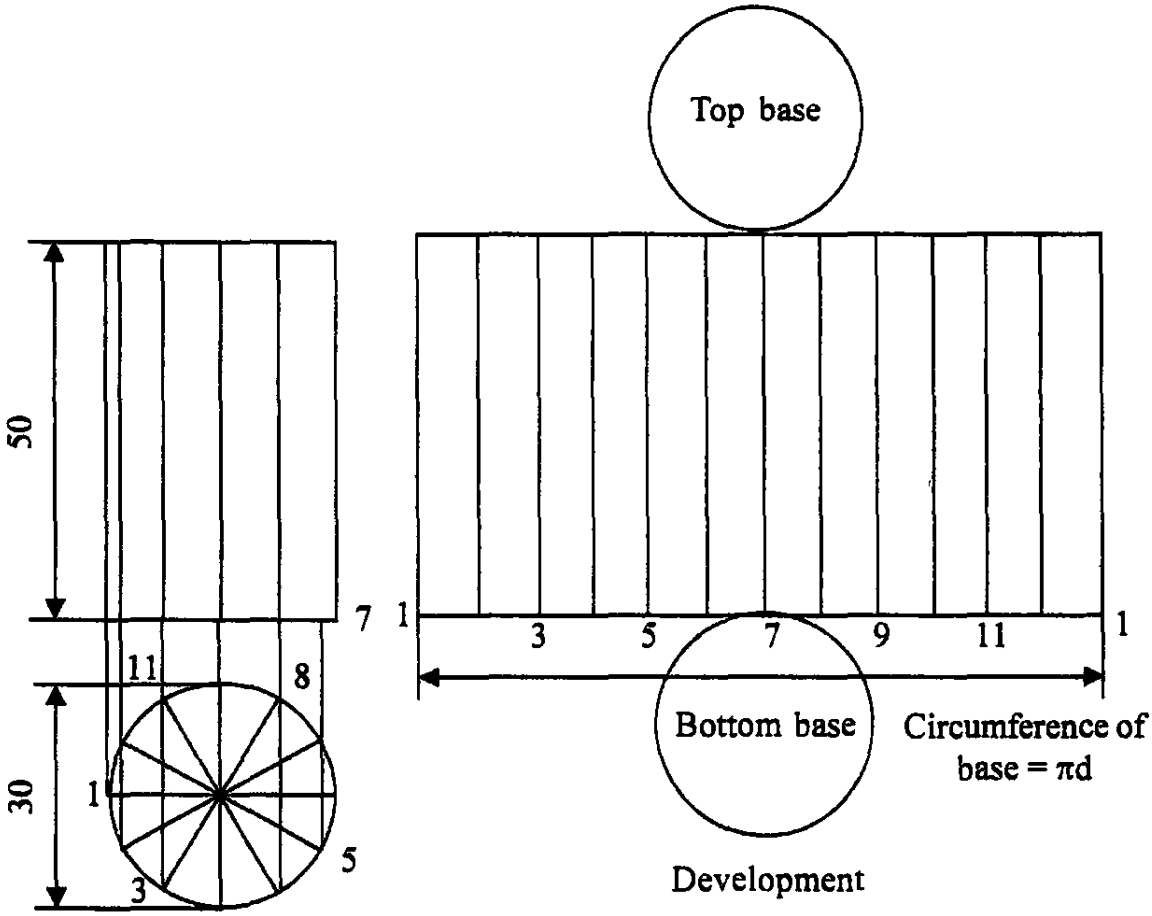

Development of Pyramid

Ex- 3

Development of a square pyramid with side of base 30 mm and height 60 mm. Construction

1. Draw the views of the pyramid assuming that it is resting on H.P and with an edge of the base parallel to V.P.

Note:

In the orientation given for the solid, all the slant edges are inclined to both H.P and V.P. Hence, neither the front view nor the top view provides the true length of the slant edge. To determine the true lehiter of the slant edge, say OA, rotate **oa** till it is parallel to xy to the position.$\mathbf{oa}_1$. Through $\mathbf{a}_1$, draw a projector to meet the line xy at $\mathbf{a}^1_1$. Then $\mathbf{o}^1_1$ $\mathbf{a}^1_1$ represents the true length of the slant edge OA. This method of determining the true length is also known as rotation method.

2. Determine the true length o-a of the slant edge.

3. with centre O and radius o'a' draw an arc.

4. Starting from A along the arc, mark the edges of the base ie. AB, BC, CD and DA.

5. Join 0 to A,B,C, etc., representaing the lines of folding and thus completing the development.

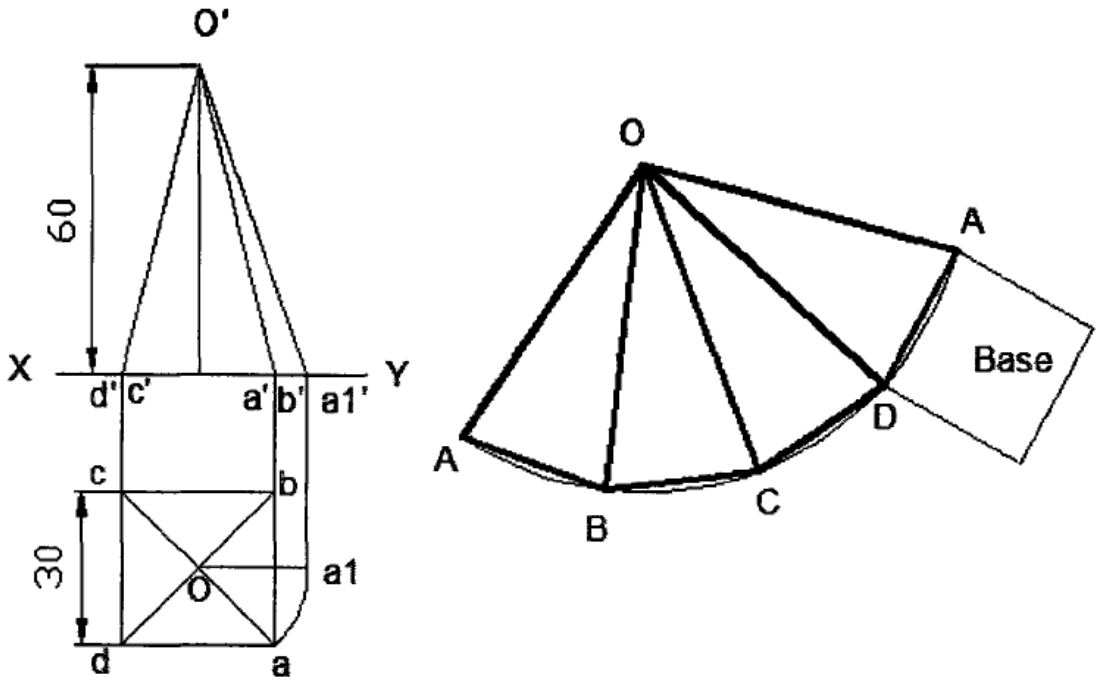

Ex- 4

Draw the development of pentagon pyramid edge 25mm and height 60mm.

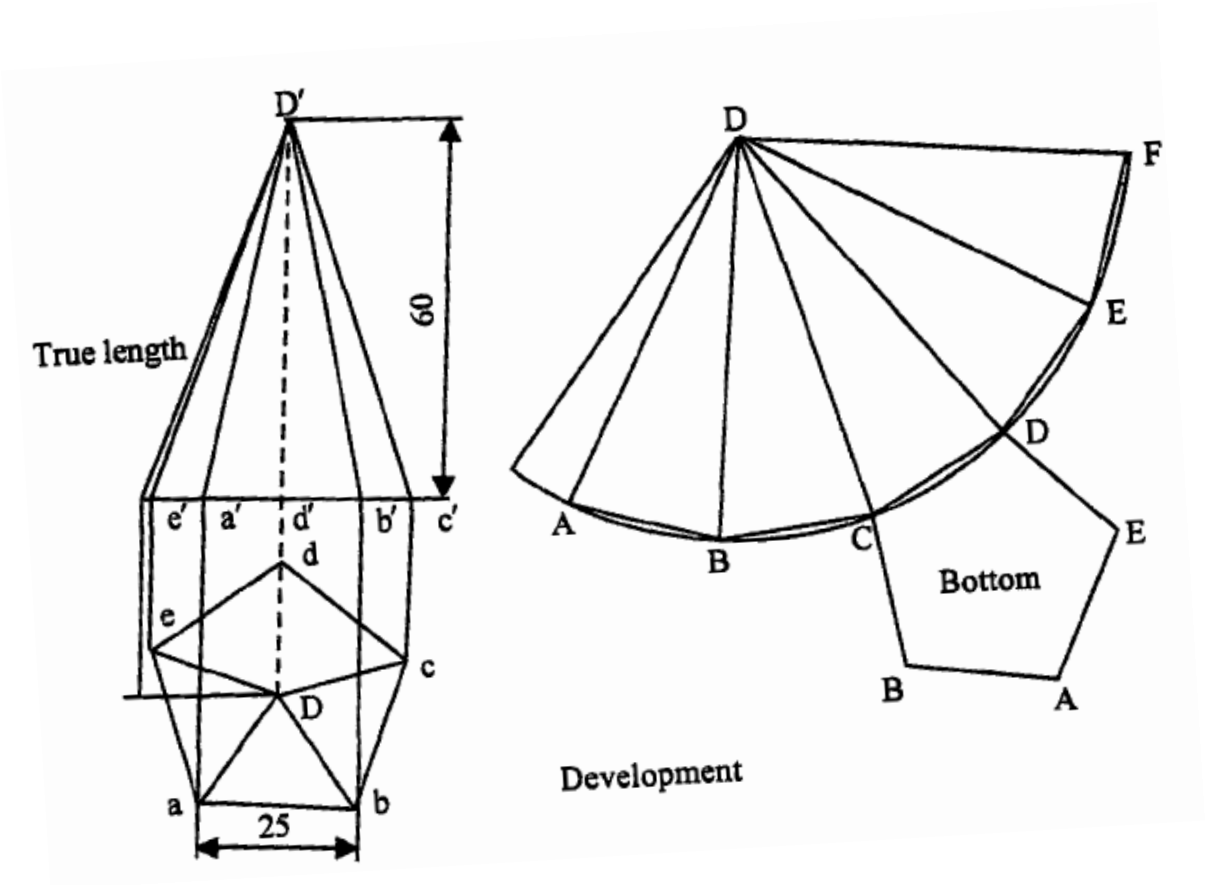

1. Draw the orthographic views of the pyramid ABCDE with its base on H.P and axis parallel to V.P.
2. With centre 0 of the pyramid and radius equal to the true length of the slant edge draw an arc.
3. Mark off the edges starting from A along the arc and join them to 0 representing the lines of folding.
4. Add the base at a suitable location.

Development of a Cone

Ex- 5

Draw the development of a cone base diameter D=50mm and height is 60mm

Construction

The development of the lateral surface of a cone is a sector of a circle.

The radius and length of the arc are equal to the slant height and circumference of the base of the cone respectively.

The included angle of the sector is given by (R / L) x 360°, where R is the radius of the base of the cone and L is the true length.

WKT,

Where,

Θ = R / L x 360°

R is the radius of the base of the cone = 25mm

L is the true length = 65 mm

Θ **= R / L x 360°**

= 25/65 x 360°

Θ = 139° (Approximately)

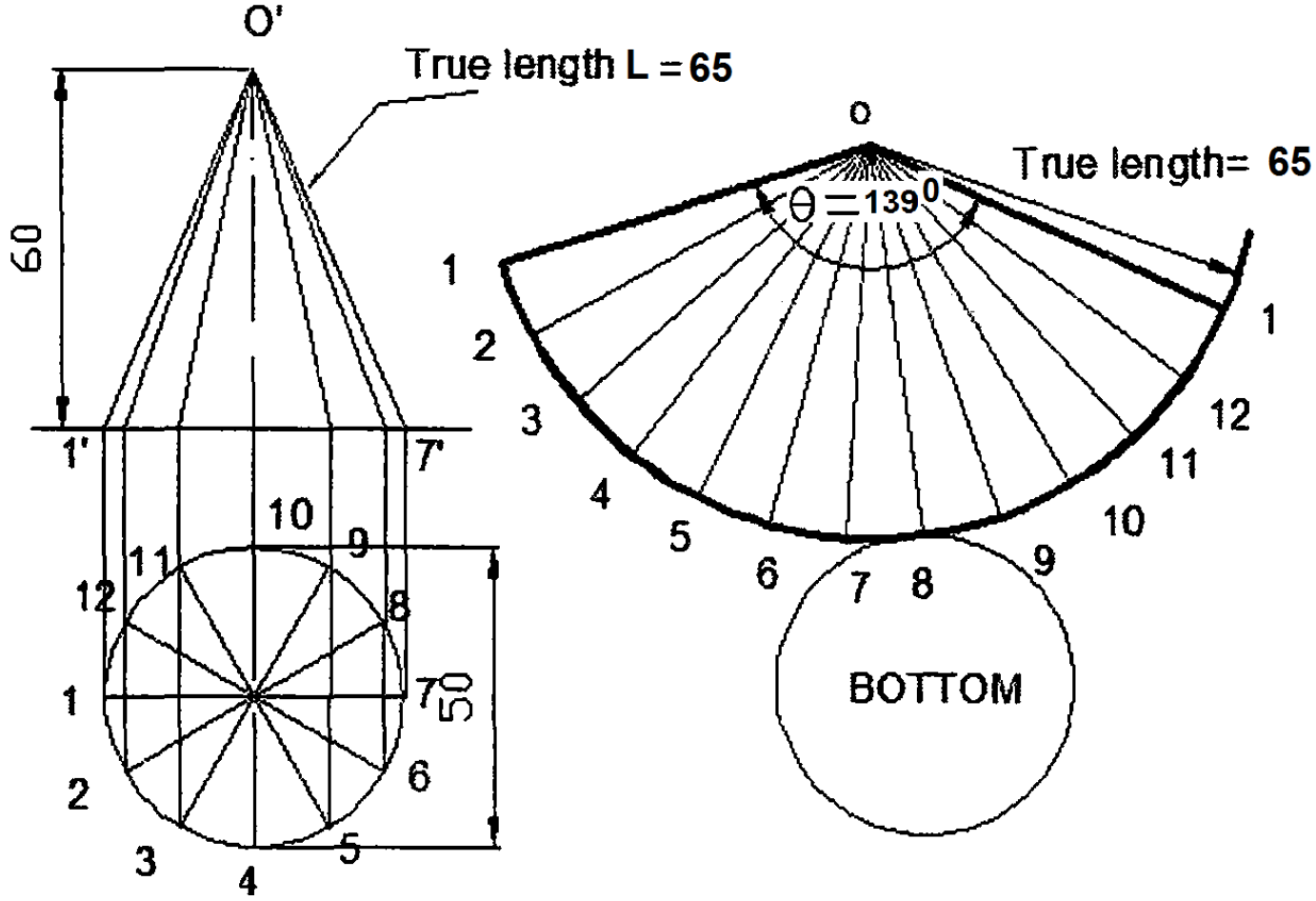

Ex- 6

A hexagonal prism of 20 mm base edges and 50 mm height, having two of its vertical rectangular faces parallel to V.P; and its base resting on H.P. It is cut by a plane perpendicular to VP inclined at 45° to HP and passing through the right corner of the top face of the prism. Draw the sectional top view and develop the lateral surface of the truncated prism.

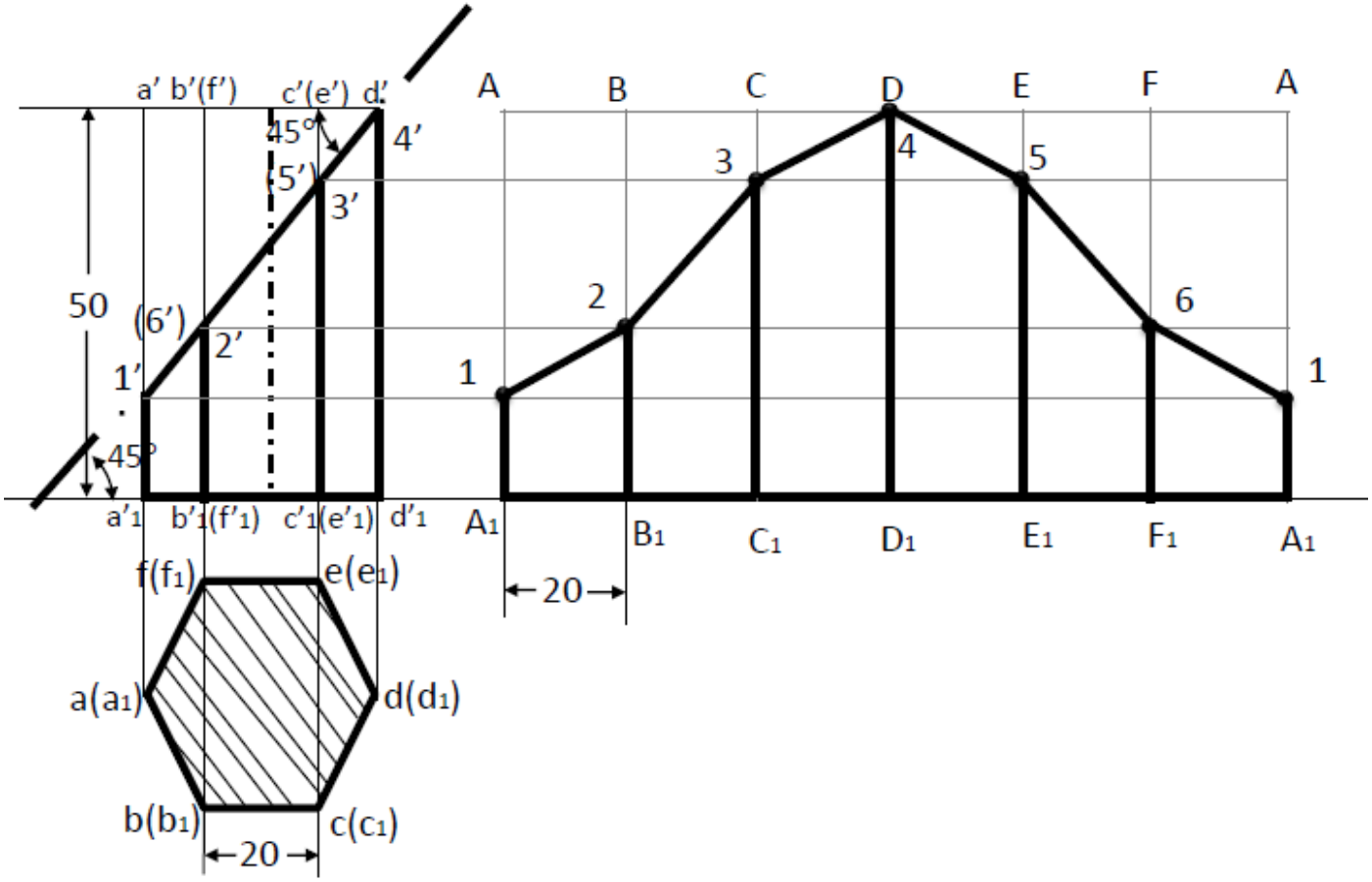

1. Draw the top view and front view of the Hexagonal prism.

2. Draw the sectional plane in the front view and mark the section points.

3. Draw the sectional top view as shown and hatch.

4. Draw the two stretch-out lines AA and A1A1 each equal to the perimeter of the base (120mm)

5. Divide A1A1 into six equal parts an draw six equal rectangles to represent development of the lateral surface of the prism.

6. From the section point 1 draw a horizontal line and mark 1 on AA1. Simillarly obtain points 2,3,4,5, 6 is the development.

7. Join 12, 23, 34, 45, 56, 61 as straight lines and darken the development of the lateral surface of the truncated prism.

Ex- 7

Draw the development of the lateral surface of the lower portion of a cylinder of diameter 50 mm and axis 70mm when sectioned by a plane inclined at 40° to HP and perpendicular to VP and bisecting axis.

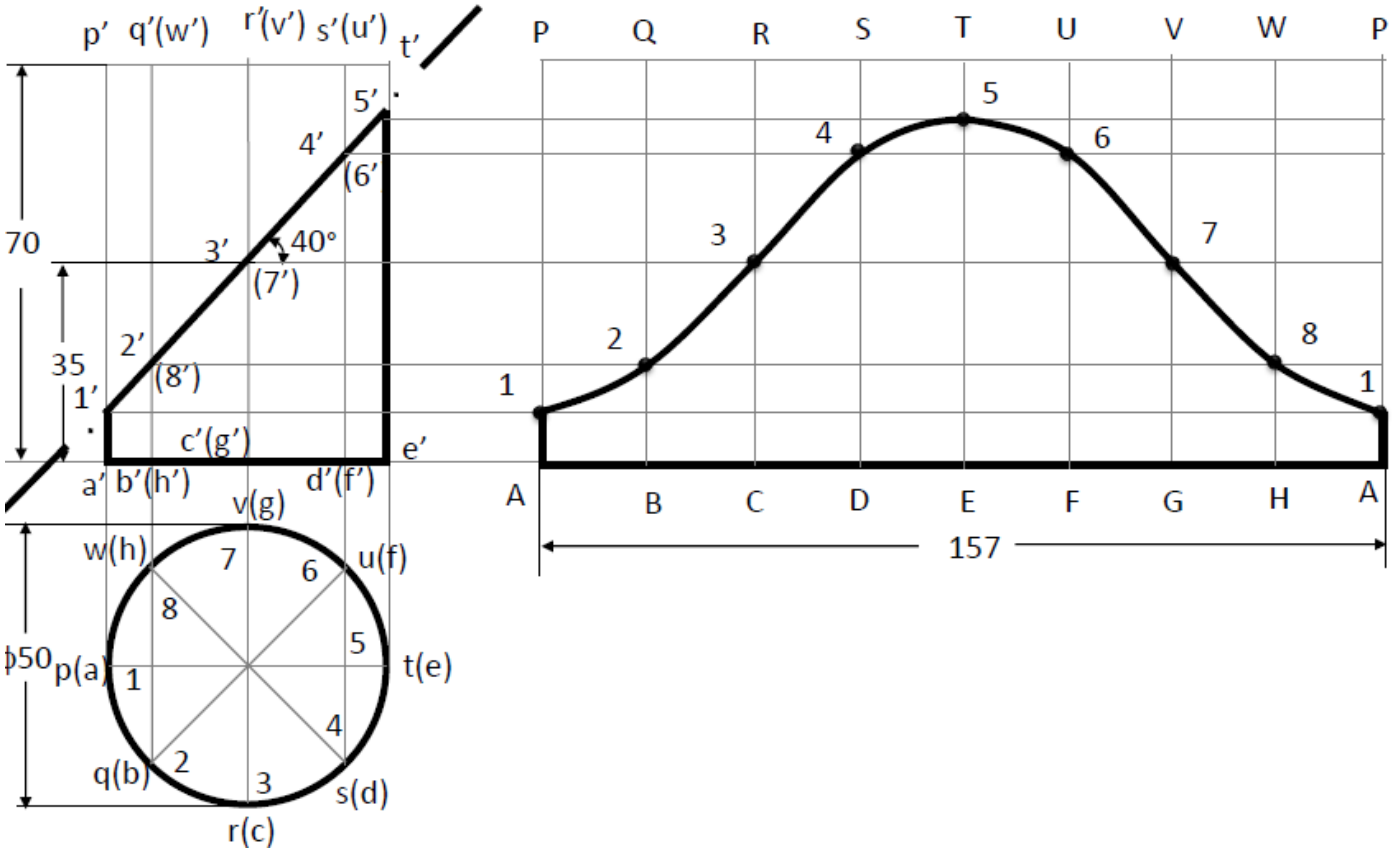

Ex- 8

A cylinder of diameter 40mm and height 50mm is resting vertically on one of its ends on the HP. It is cut by a plane perpendicular to the VP and inclined at 30° to the HP. The plane meets the axis at a point 30mm from the base. Draw the development of the lateral surface of the lower portion of the truncated cylinder.

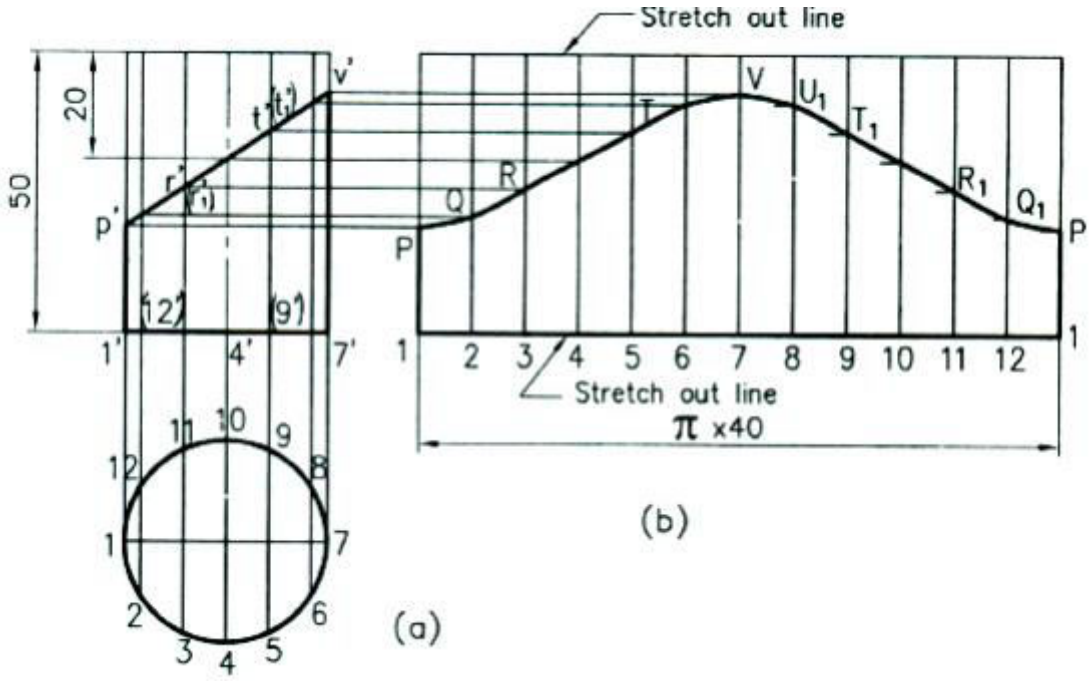

Ex- 9

Draw the development to the lateral surfaces of a square pyramid, side of base 25mm and height 50mm, resting with its base on HP and an edge of the base parallel to VP.

If the top view of a slant edge of a pyramid is parallel to XY, then the front view of that edge will give its true length.

To obtain the true length of a slant edge make "**ob**" parallel to XY.
O as center and ob as radius draw an arc to cut the horizontal drawn from o at a1.

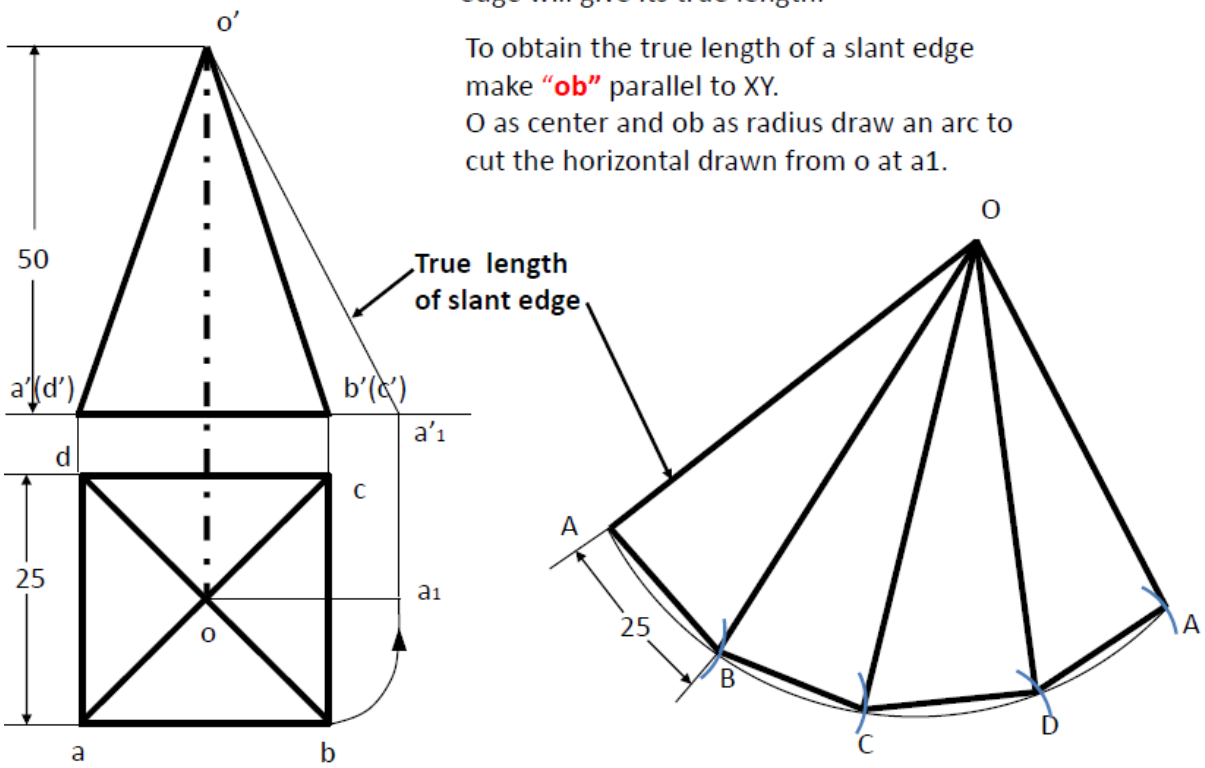

Ex- 10

A pentagonal pyramid of base side 25mm and height 60mm is resting vertically on its base on the ground with one of the sides of the base parallel to the VP. It is cut by a plane perpendicular to the VP and parallel to the HP at a distance of 25mm above the base. Draw the development of the lateral surfaces of the frustum of the pyramid. Also show the top view of the cut surface.

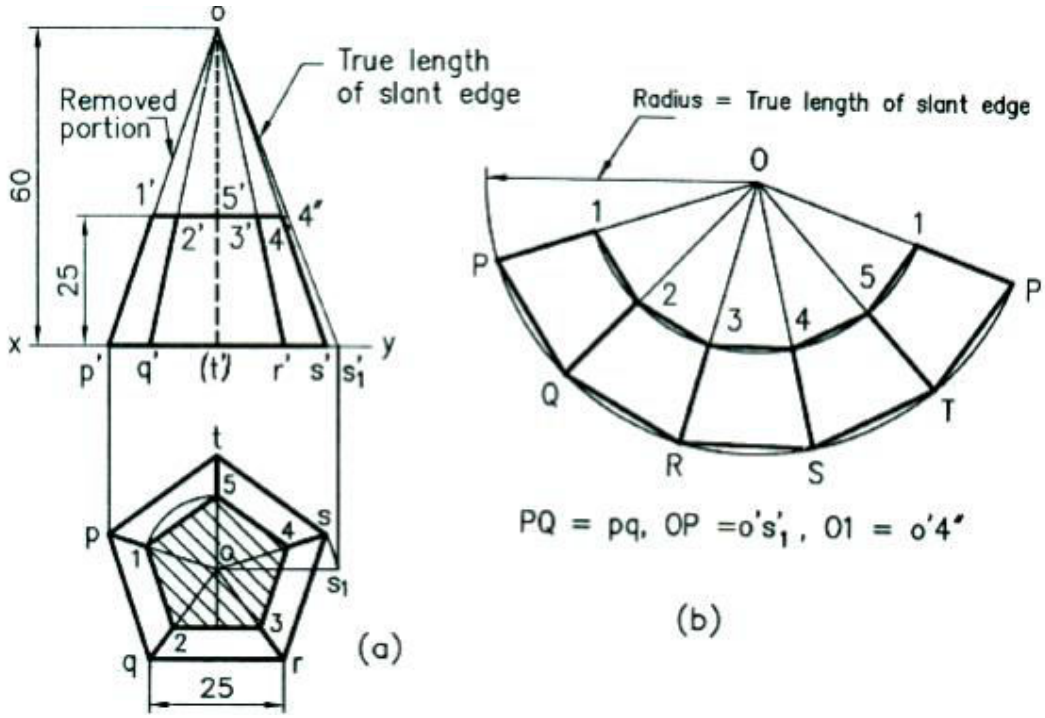

Ex- 11

A cone of base 50 mm diameter and height 65 mm rests with its base on H.P. A section plane perpendicular to V.P and inclined at 30° to H.P bisects the axis of the cone. Draw the development of the lateral surface of the truncated cone.

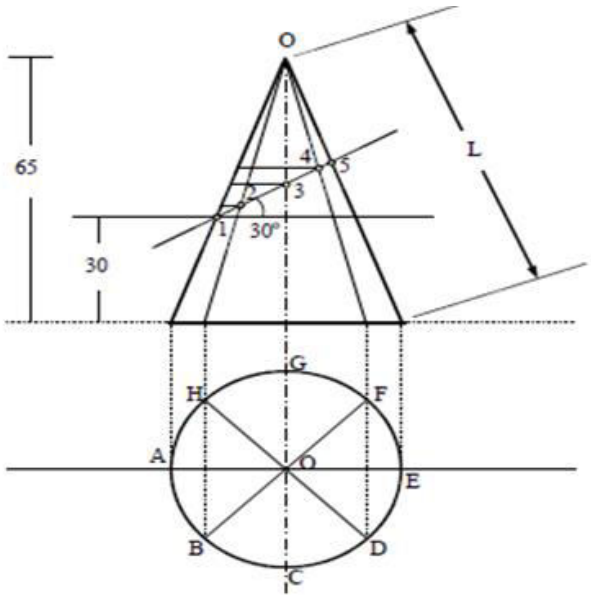

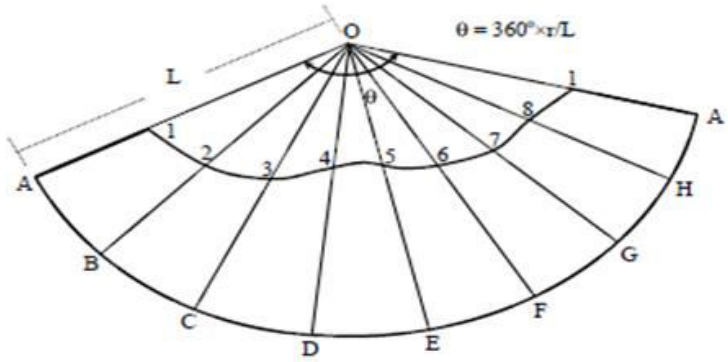

Ex- 11

A cone of base 60 mm diameter and height 70 mm rests with its base on H.P. A section plane perpendicular to V.P and inclined at 30° to H.P bisects the axis of the cone. Draw the development of the lateral surface of the truncated cone.

oa is parallel to XY. So o'a' = OA = True length
of the generator (slant height)

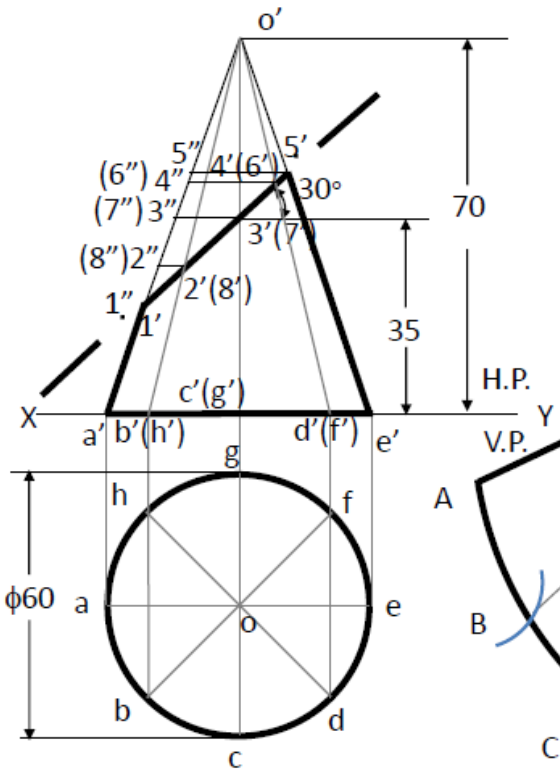

θ = (r/L)*360°
θ = (30/76)*360°
θ =142°
Divide 142° into 8 equal parts.
Per division 17.75°

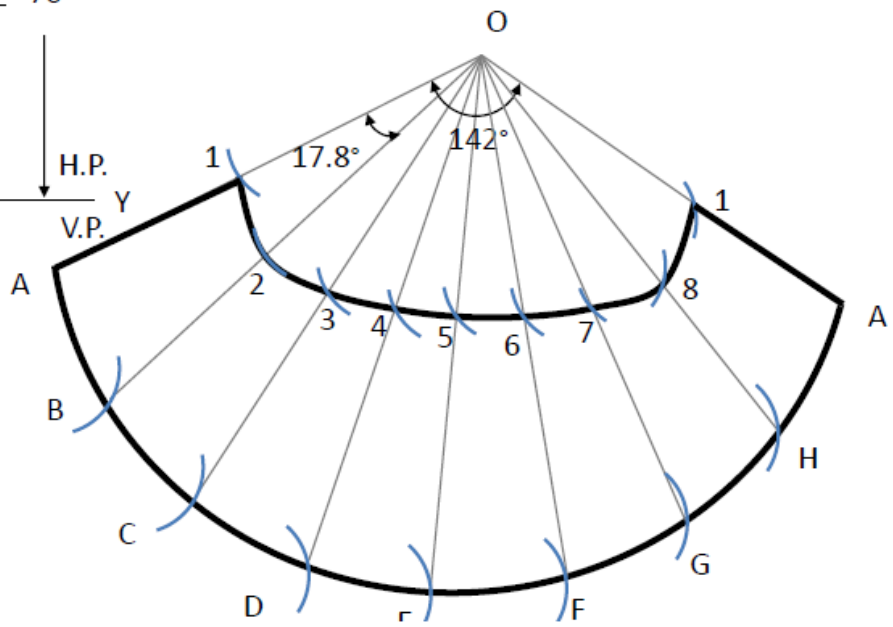

Ex- 12

Draw the development of Cylindrical 90° Elbow pipe.

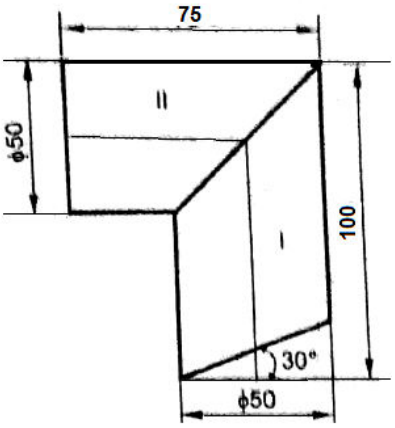

Steps

1. The Elbow is to be considered as 2 pieces (I & II)
2. Both the pieces I & II are truncated cylinders.
3. Develop them separately.

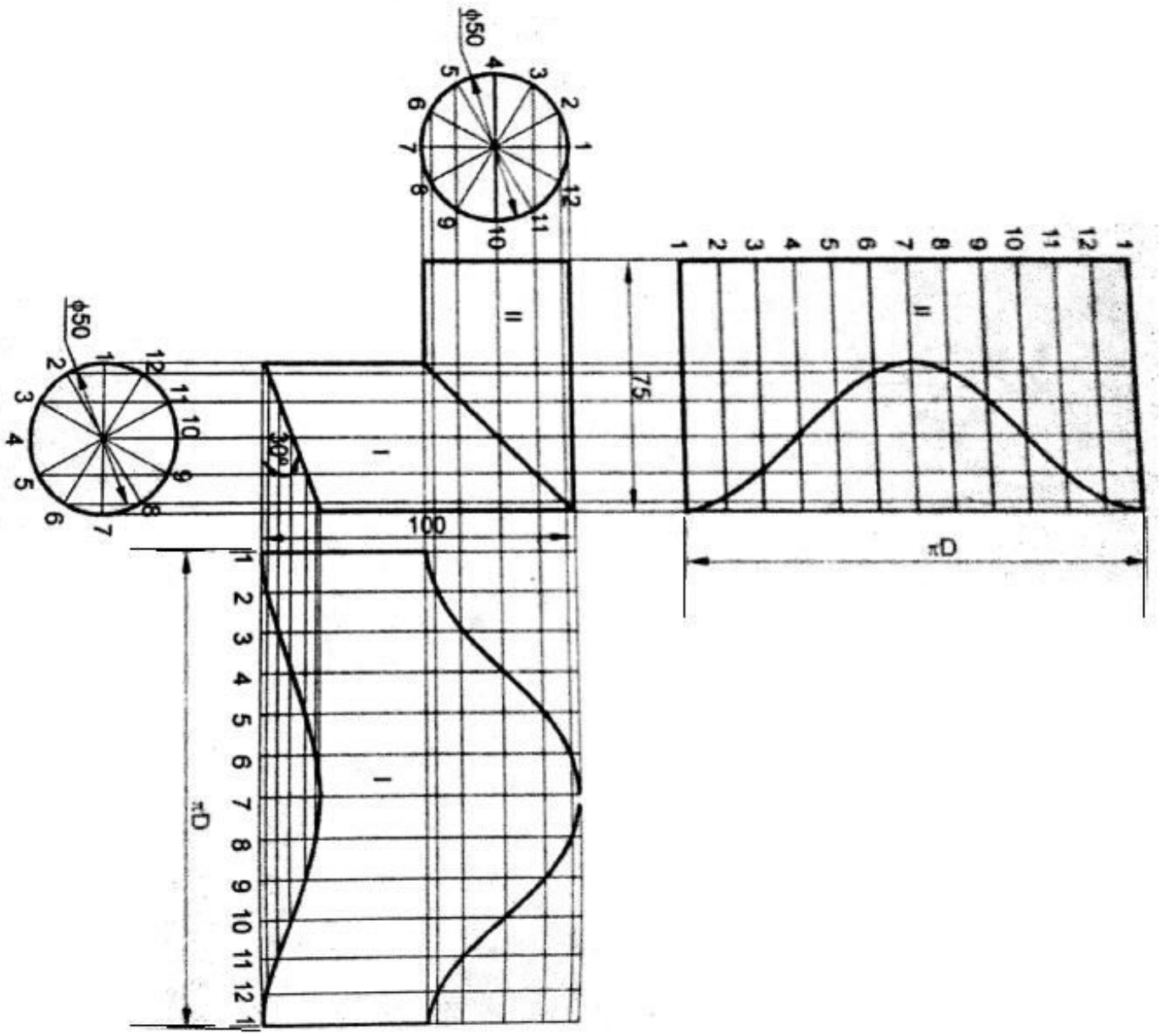

Ex- 13

Draw the development of rectangular duct.

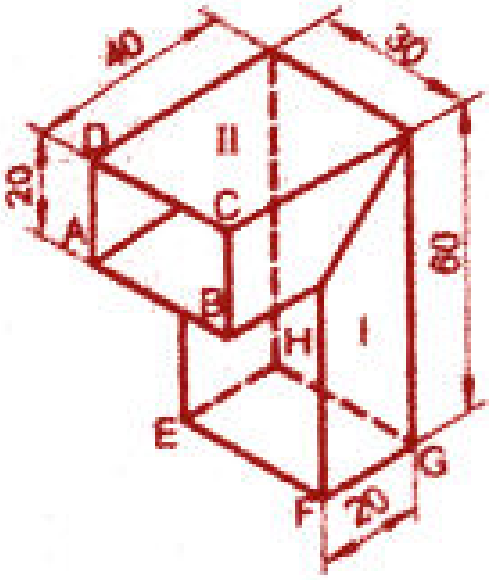

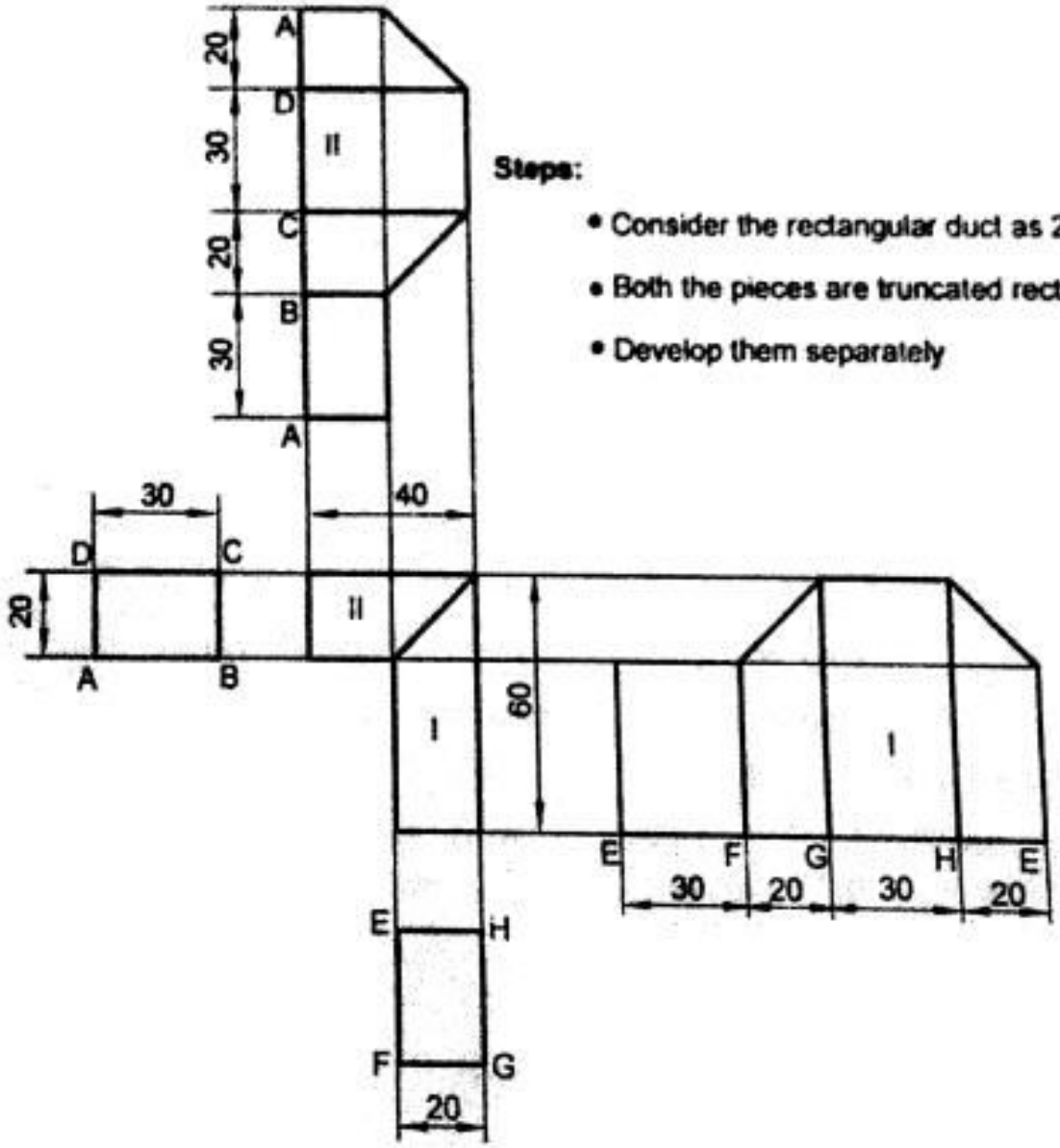

Steps:

- Consider the rectangular duct as 2 pieces (I&II)
- Both the pieces are truncated rectangular prism
- Develop them separately

Ex- 14

A lamp shade or a frustum of cone of base diameter of 80mm and top diameter of 40mm has a height of 40mm. Draw the development.

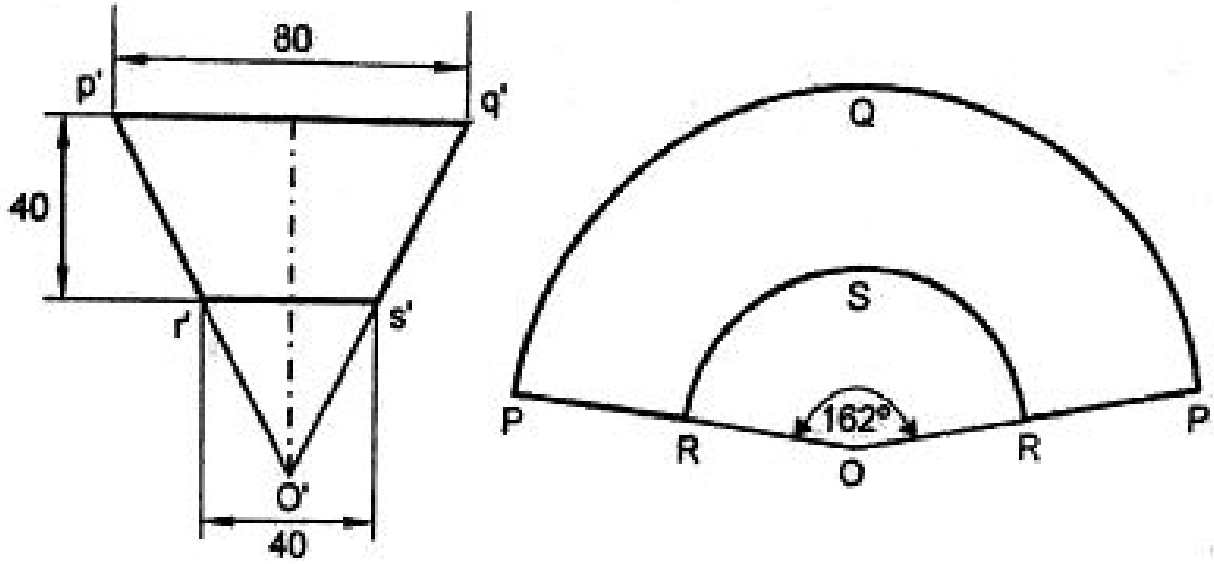

Procedure:

- Draw the front view of the lamp shade (or) frustum of cone.
- Extent the slant generators to meet at o'. Then o'p'q' shows the front view of the full cone.
- For drawing development with O as centre and true slant length O' P' as radius draw an arc.
- Construct the sector with angle θ using the following formula.

$$\theta = \frac{\text{Radius of the base circle}}{\text{True slant length}} \times 360°$$

$$\theta = \frac{40}{89} \times 360° = 162°$$

- Draw another radial line so that the angle subtended at O is 162°. Then PO PQP gives the development of the full cone.
- With O as centre and OR = O'S' as radius, draw arc RSR corresponding to the top end of the frustum.
- The figure enclosed by PRSRPQP gives the development of the lamp shade (or) frustum of cone.

Ex- 15

Draw the development of a funnel .

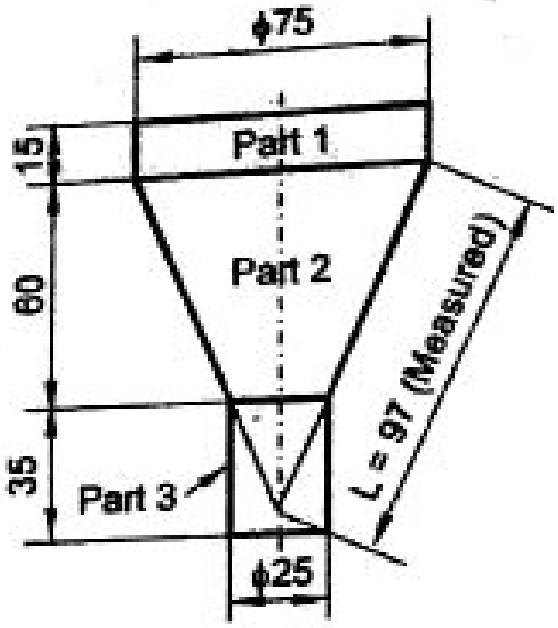

Steps

1. Divide the Funnel into 3 parts (I, II & III)
2. Both the pieces I & III are cylinders.
3. Part II as frustum of cone
4. Develop them separately.
5. For part II, to calculate the Θ by using the formula, **Θ = R / L**

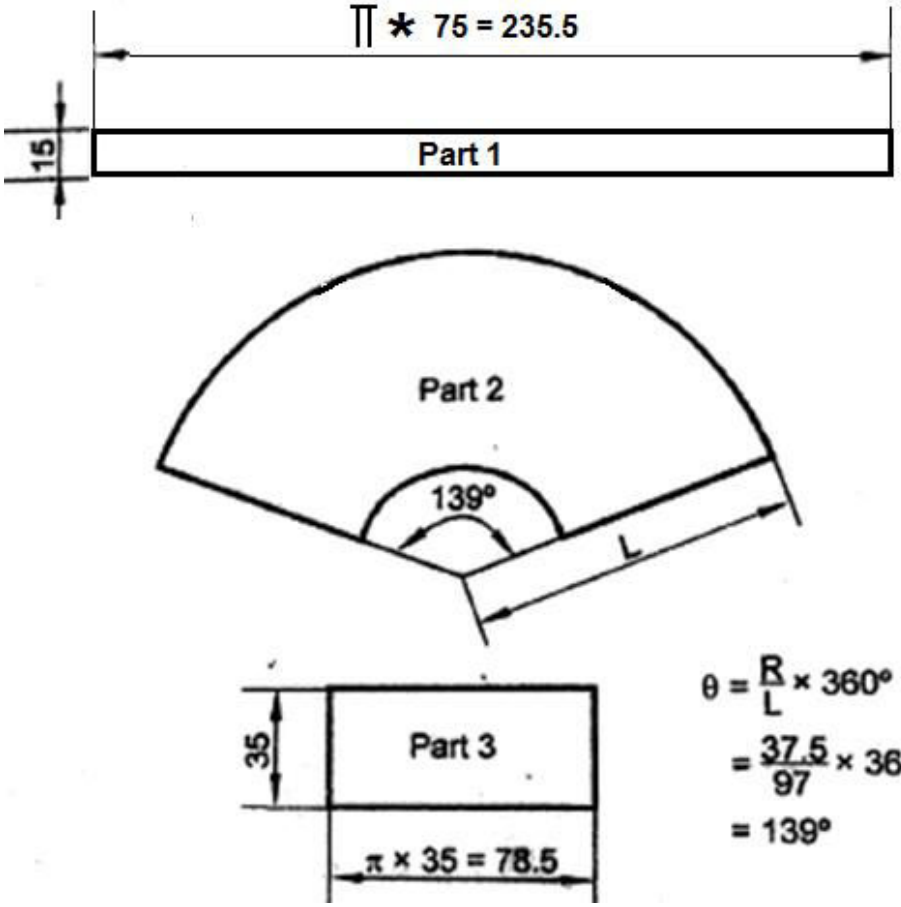

$$\theta = \frac{R}{L} \times 360^\circ$$

$$= \frac{37.5}{97} \times 360^\circ$$

$$= 139^\circ$$

DEVELOPMENT OF SURFACES – EXERCISES

1. Draw the development of rectangular prism of size 40X30 mm and height 70 mm stands on its base on the H.P.
2. Draw the development of pentagonal prism of base edge 30mm and axis 60mm long stands on its base on the H.P.
3. Draw the development of hexagonal prism of side 35mm and height of 70mm stands on its base on the H.P.
4. A square pyramid of the base 30mm and height 60mm rest on the H.P. on its base edges are parallel to the V.P. Draw the development.
5. A pentagonal pyramid of base edge 25mm and height 60mm is standing on its base on the ground with a base edge is parallel to the V.P. Draw the development of pentagonal pyramid.
6. A hexagonal pyramid of base side 30mm and axis 60mm is resting on its base on H.P. with two of base edge and perpendicular to the V.P. Draw the development of the hexagonal pyramid.
7. Draw the development of a cylinder of 50mm and 70mm height is resting on its base in the H.P.
8. Draw the development of a cone of base diameter 60mm and height 70mm as resting on its base on the ground.
9. Draw the development of the cone of base diameter 60mm and height 70mm as resting on its base on the ground.
10. A hexagonal prism of base edge 25mm and axis 70mm long stands on its base on the H.P. It is cut by a plane inclined at 45^0 and passing through the midpoint of the axis. Draw the development of the lateral surface of the prism.
11. Draw the developments of following sheet metal parts,

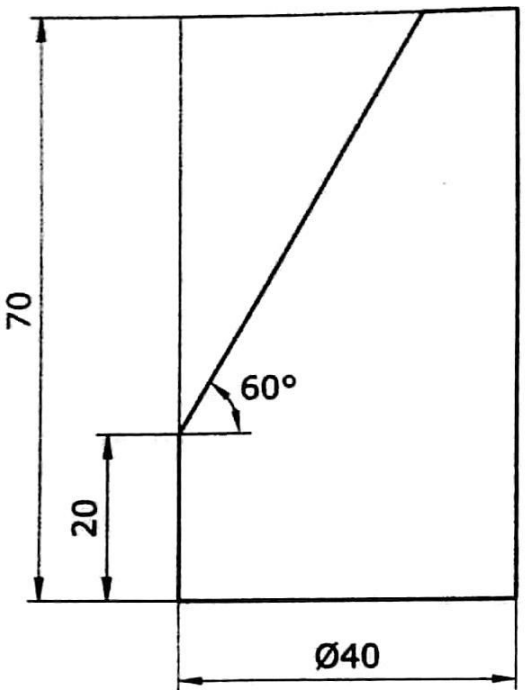

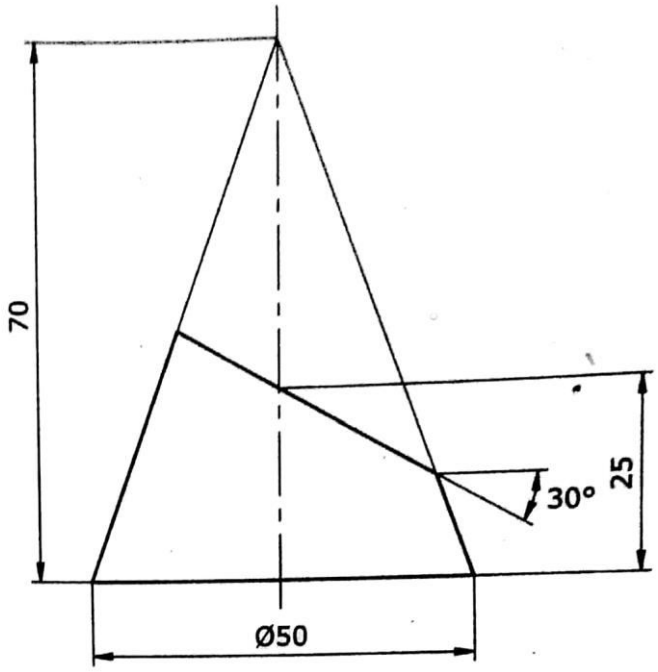

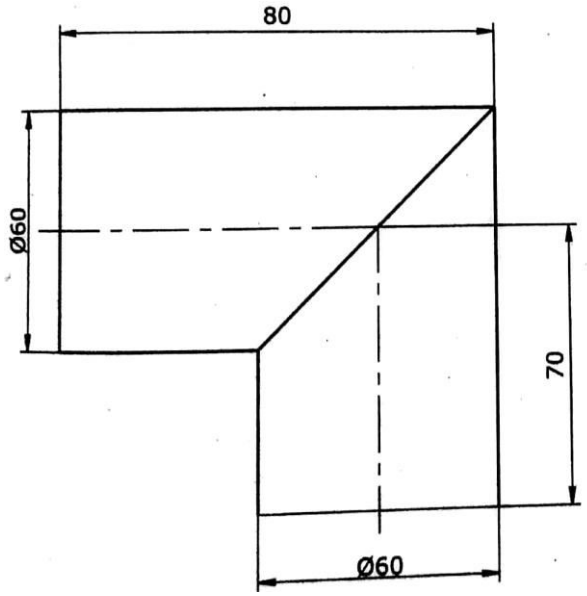

Circular elbow pipe

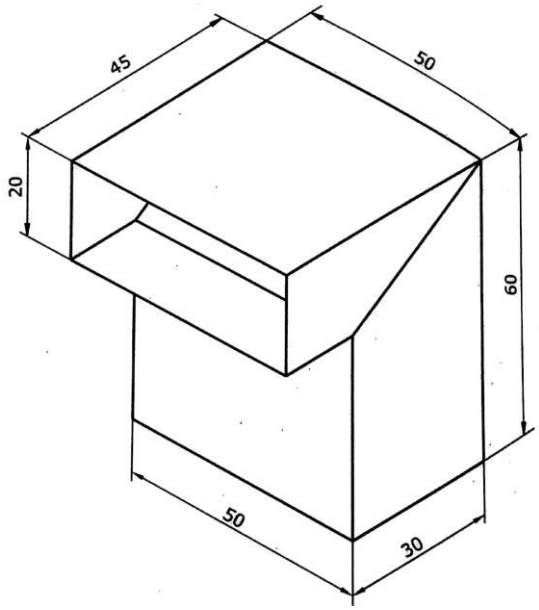

Rectangular Duct

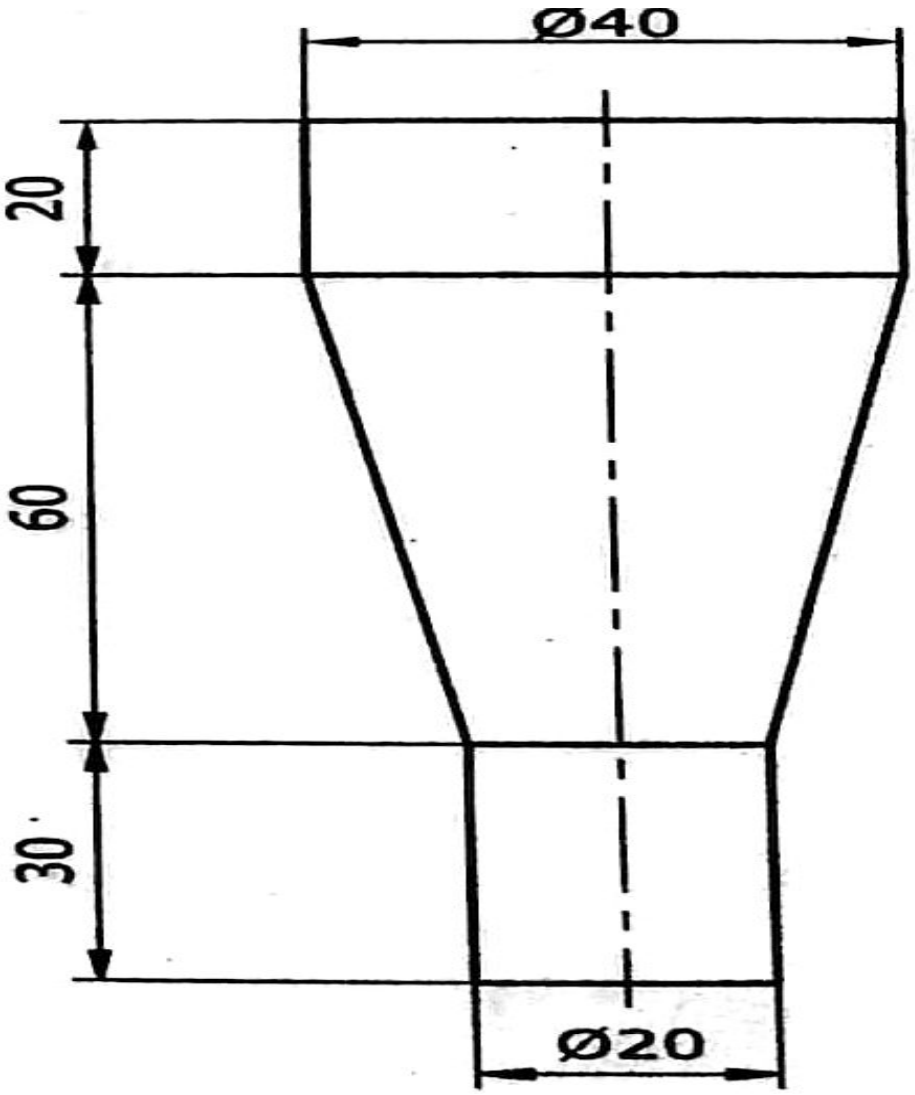

Funnel

UNIT-IV MISSING VIEWS AND ISOMETRIC PROJECTIONS

4.1 Missing views

Introduction

The identification of missing view from the given views is very important which will improve the drawing ability. The different method of dimensioning is also important to present our drawing in an understandable format.

Reading of simple engineering drawing

An engineering drawing conveys many different types of information of which the most important thing is the shape of the object. Fig 1 shows a orthographic projection of sample drawing. In this drawing the shape of the part is represented by three views.

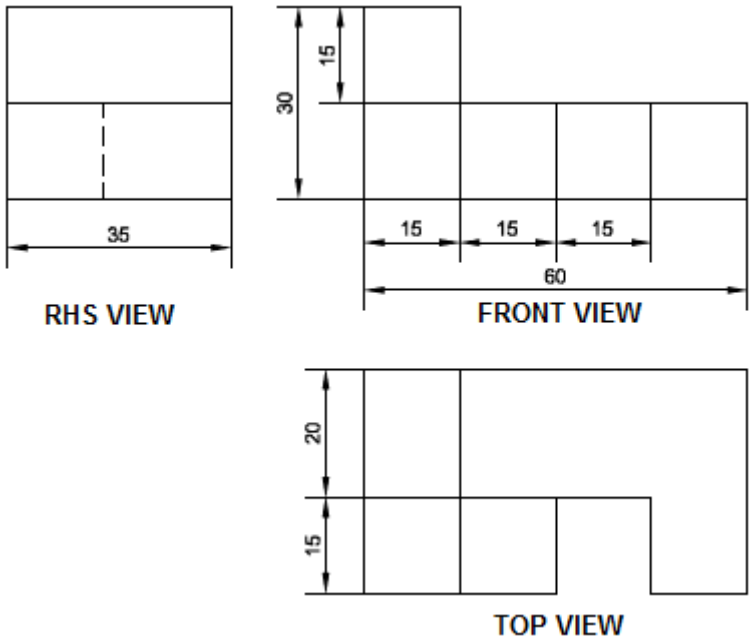

It is very difficult to imagine the shape of the object from the above drawing.

But in Fig 2, the same object is shown pictorially in a different ways and the shape is easily understood even by a layman.

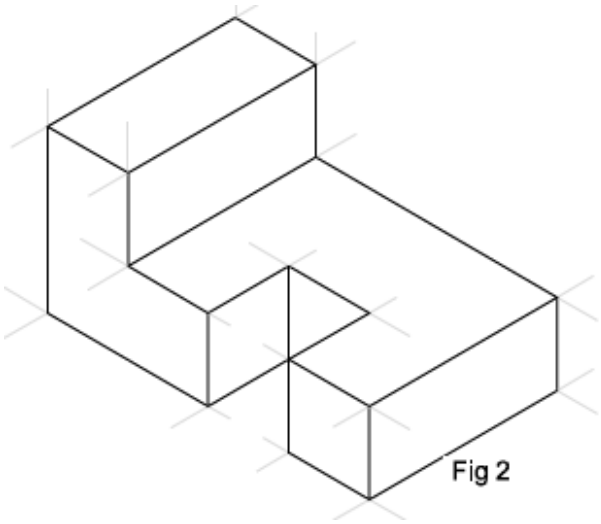

From ***Fig 1 & 2, it is clear that there are different ways of describing the shape of a part on a paper.*** **Fig. 1** is called as Multiview drawing or Orthographic drawing and the method adopted in **Fig. 2** is called pictorial drawing. The different views in a multiview drawing are called as 'Orthographic views' or Orthographic projections.

To describe the shape of a part in engineering drawings, multiview or orthographic view method is preferred as only orthographic view can convey the true shape of the object. Whereas in pictorial drawing through this shape is easily understood and it is distorted.

Importance of visualization of an object

- Any engineer or technician should have the ability to understand the orthographic views and visualize the original object by analyzing all the views.
- The meaning of two circles shown in the ***figure 3.1.*** Can be understood only after studying the other view. ***The circles may be either projections or holes or both.***

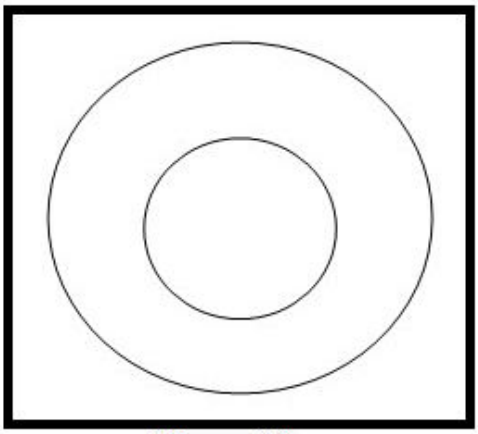

Figure 3.1

- Every point and a line in the orthographic projection has a meaning.
- ***A point may represent an edge or a corner. A line may be a representation of an edge or a surface.***
- The drawing can be understood only by referring again and gain the views. Then the shape of the object as a whole is to be visualized.

Methods for Missing Views

- In an Orthographic projection, two views are necessary to study about the object or understand the nature of the object.
- Sometimes, the third view is needed to completely imagine the object. It is necessary to create the third view from the two available views so that all the details of the object are obtained. Thus creating the missing view is of importance in orthographic projection.
- Using Scale Method
- Using Divider Method
- Using 45° Triangle Method.
- Using Miter line method.

In this topic we are briefly discussing about the Miter Line method to draw the missing or third view to understand the nature of an object.

Using a Miter line method

- Given two completed views you can use a miter line to transfer the depths and draw the side view of the object.
- To move the left side view to the right or the top view downward by moving the miter line closer of further from view.
- You do not need to draw continues lines between the top and side view via the miter line.
- ***The 45° miter line method is convenient for transferring a large number of points.***

Miter line method to construct a Side View & Top View

Ex- 1

1. Draw the Front View and top view.
2. Construct the miter line at 45°.(As shown in Fig.)
3. Where the horizontal projections of the top view, intersects the miter line – draw vertical projection.
4. Project horizontal lines to the right of the front view to complete the side view.

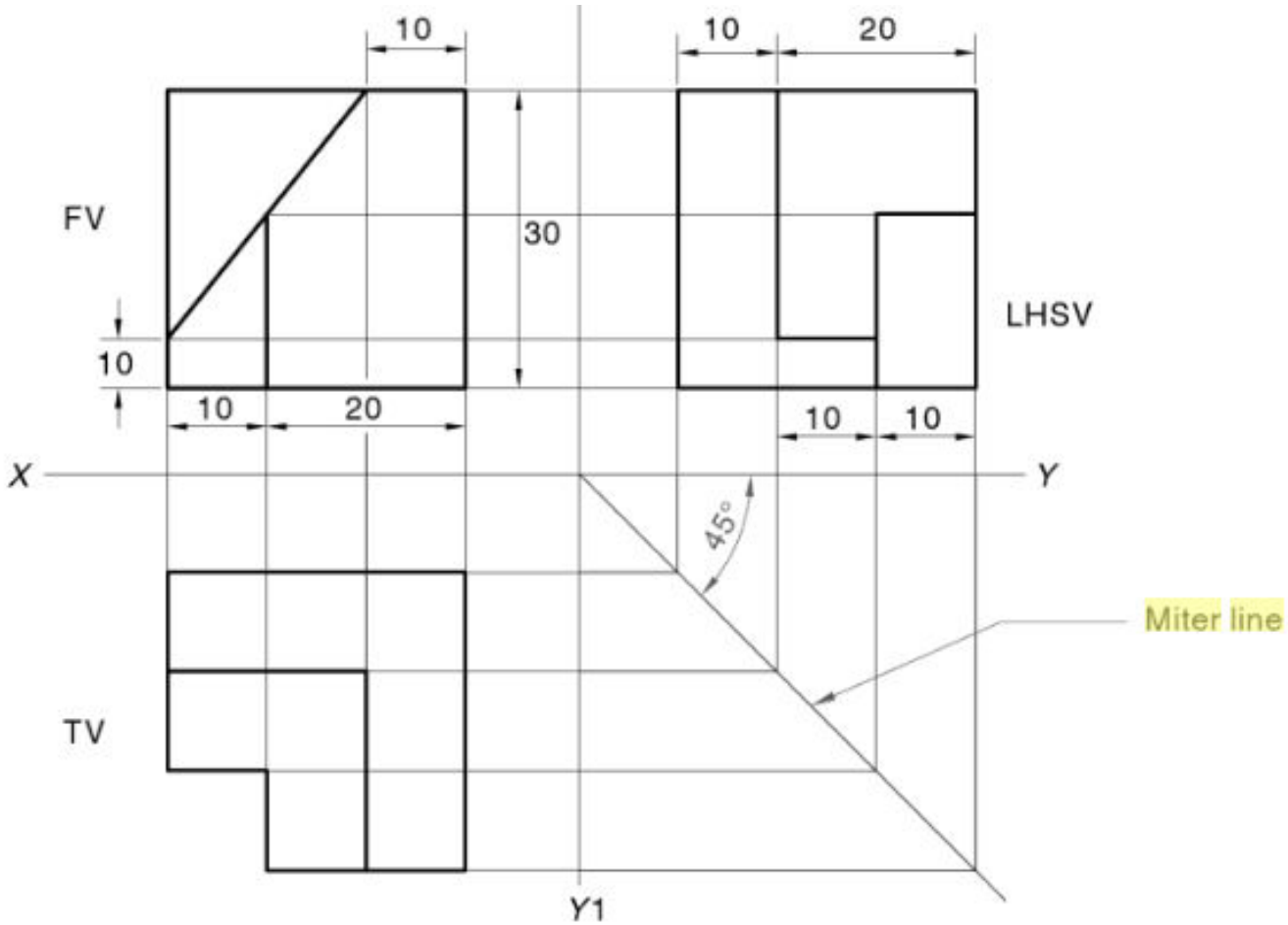

The same technique is adopted to draw top view (If Front view & Side view are available.)

Ex – 2 : Draw the Missing view or third view *(Right Side View)*

Note : ** For better understanding the isometric view of an object is given for reference. But the same is not given in examination *

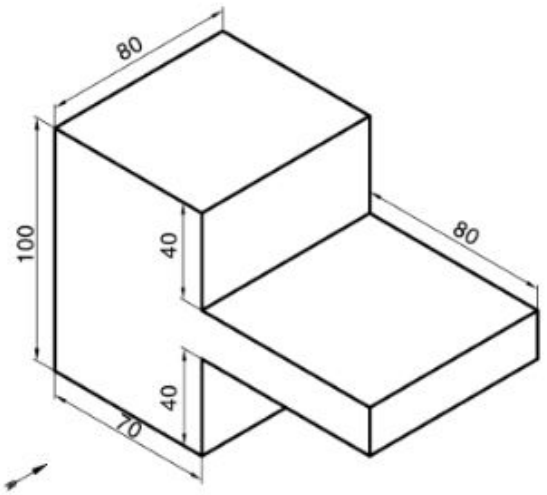

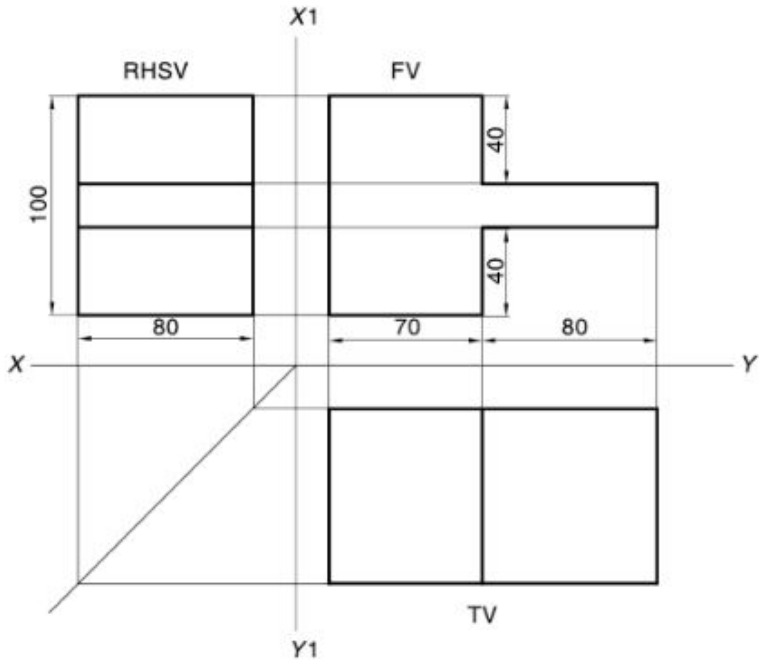

Ex – 3 :

Draw the Missing view or third view *(Top View)*

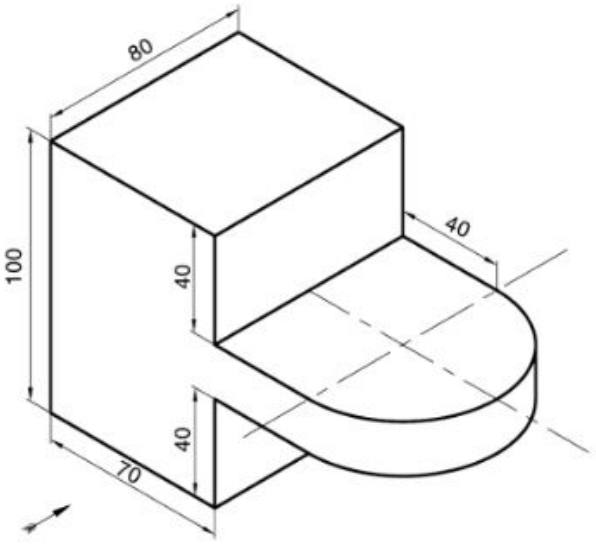

(a)

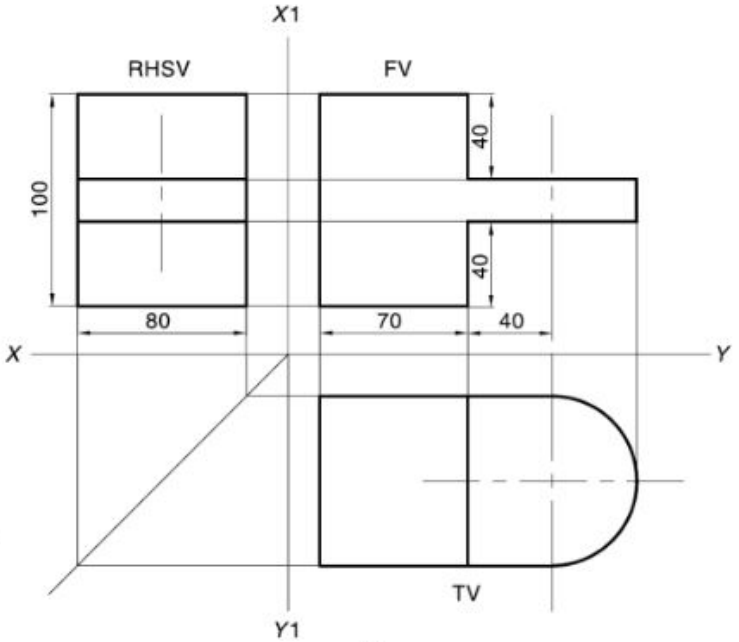

(b)

4.2 Isometric projections

Introduction:

The isometric projection of an object is a one plane view drawn with the object so placed with respect to the plane of projection that all the three principal axes appear to be inclined to each other at an equal angle of 120°.

ISOMETRIC SCALE

When one holds the object in such a way that all three dimensions are visible then in the process all dimensions become proportionally inclined to observer's eye sight and hence appear apparent in lengths. This reduction is 0.815 or 9/11 (approx.). It forms a reducing scale which is used to draw isometric drawings and is called Isometric scale. In practice, while drawing isometric projection, it is necessary to convert true lengths into isometric lengths for measuring and marking the sizes. This is conveniently done by constructing an isometric scale.

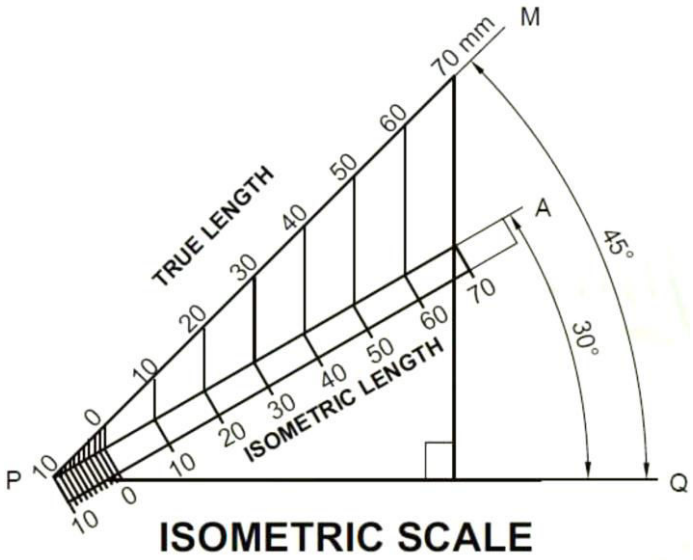

Construction of isometric scale:

From point A, with line AB draw 30^0 and 45^0 inclined lines AC & AD respective on AD. Mark divisions of true length and from each division-point draw vertical lines up to AC line. The divisions thus obtained on AC give lengths on isometric scale.

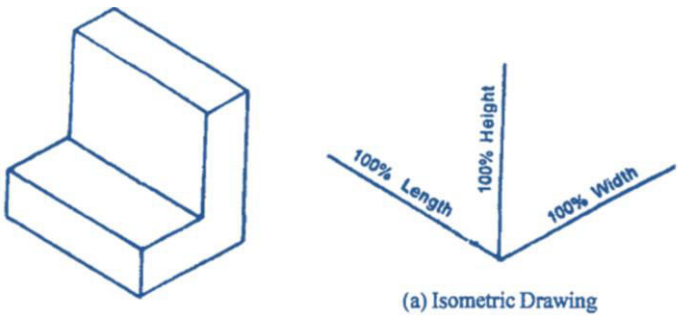

(a) Isometric Drawing

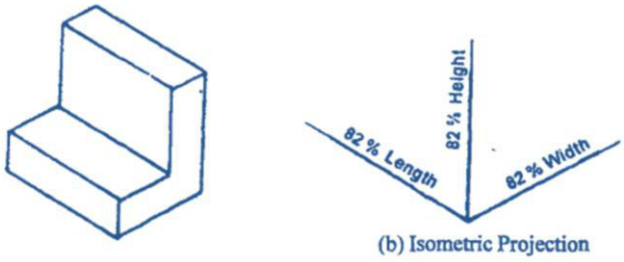

(b) Isometric Projection

Difference between Isometric View and Isometric Projection

Isometric View	Isometric Projection
Drawn to actual length	Drawn to Isometric length
When lines are drawn parallel to isometric axes true lengths are drawn	When lines are drawn parallel to isometric axes 0.81 times the true lengths are drawn

Terminology:

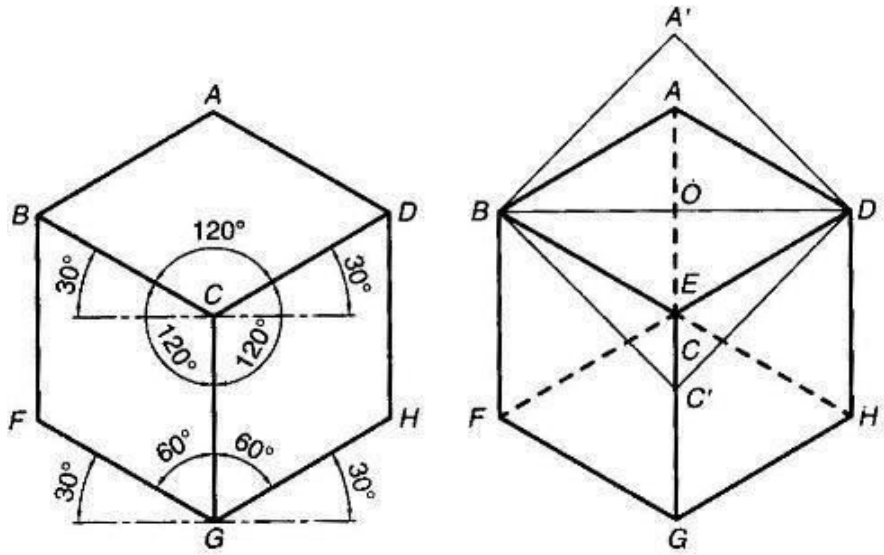

Isometric axes:

The Three Lines CB, CD, CG meeting at a point C and making an angle of 120^0 with each other are called Isometric axes.

Isometric Lines:

The Lines parallel to the Isometric Axis are termed as Isometric lines. Example from above fig. AB, AD, GF, GH, BF, DH are Isometric Lines.

Non-Isometric Lines*:*

The lines which are not parallel to the isometric axes are known as Non- Isometric Lines Example from above fig. BD, AC, CF, BG are Non-Isometric Lines.

Isometric Planes:

The planes representing the faces of the cube as well as other planes parallel to these planes are termed as Isometric Planes Example from above fig. ABCD, BCGF, CGHD are Isometric Planes

Isometric Scale:

It is the scale which is used to convert the true length in to Isometric Length

Isometric views of planes:

Simple Problems:

Problem: 1

Draw the isometric view of a square with 40mm side

Solution:

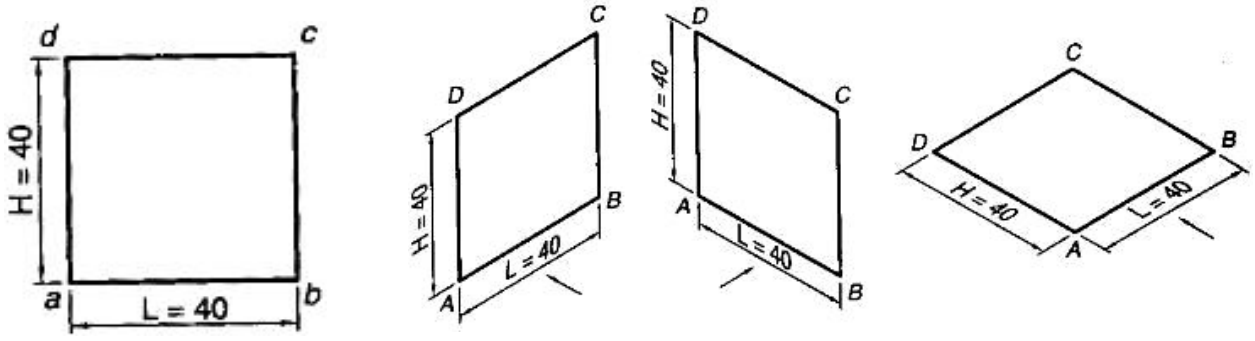

Problem:2

Draw the isometric view of a Hexagon with 40mm side such that its surface is Parallel to the HP and a side Parallel to the VP?

Solution:

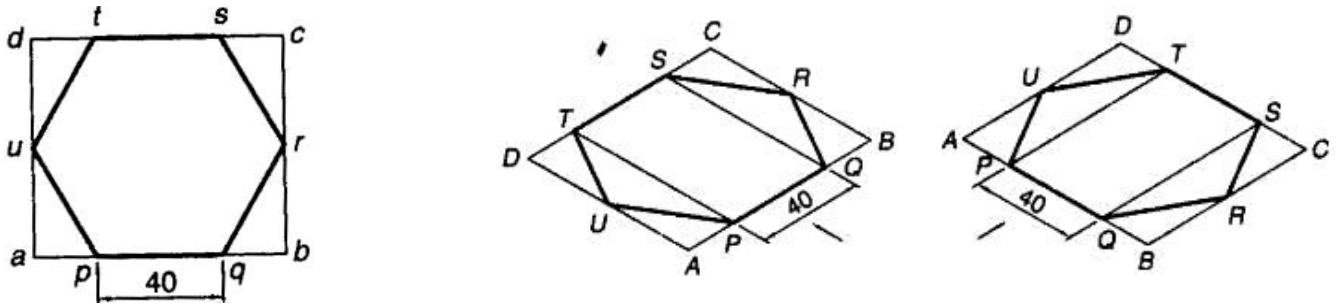

Problem: 3

Draw the isometric view of a Circle lamina with a 60mm Diameter on all three Principle Planes using FOUR CENTER METHOD.

Construction:

1. Draw a Rhombus ABCD of 60mm side to represent isometric view of a square
2. Mark 1,2,3 and 4 as a midpoints of the sides AB,BC,CD and DA respectively join (the ends of the minor diagonals) B to meet points 3 & 4 and D to meet points 1 & 2. Let B4 and D1 intersect at point E and B3 and D2 intersect at a point F. then B,E,D and F are the Four centers for drawing the ellipse
3. With center B and radius B3 draw Arc 3-4. With center D and Radius D1 draw Arc 1-2. With center E and radius E1 draw Arc 1-4. With centre F and radius F2 draw Arc 2-3.

These Arcs join in the form of an Ellipse which represents the required isometric as shown in figures

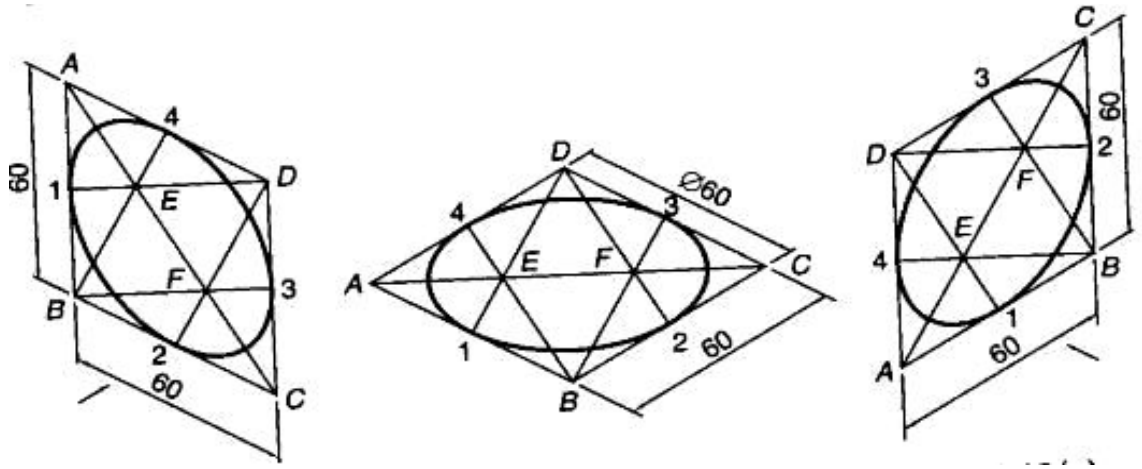

Problem: 3A (Procedure to draw an **Arc***)*

Draw the isometric view of the plane figure given below

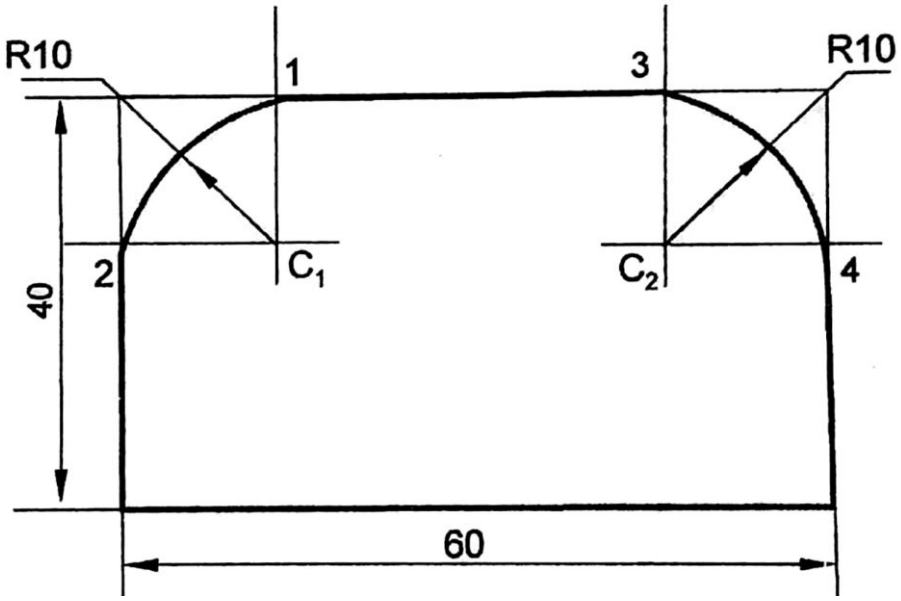

- Draw the isometric view of the rectangle.
- From the top corners of the parallelogram, mark points on the sides at a distance equal to the radius of the arcs (R) and erect perpendiculars at these points to the sides concerned as shown.
- These perpendiculars intersect each other at C_1 and C_2.
- With C_1 & C_2 as centres and radii C_1-1 and C_2-2 draw arcs and complete the isometric view.

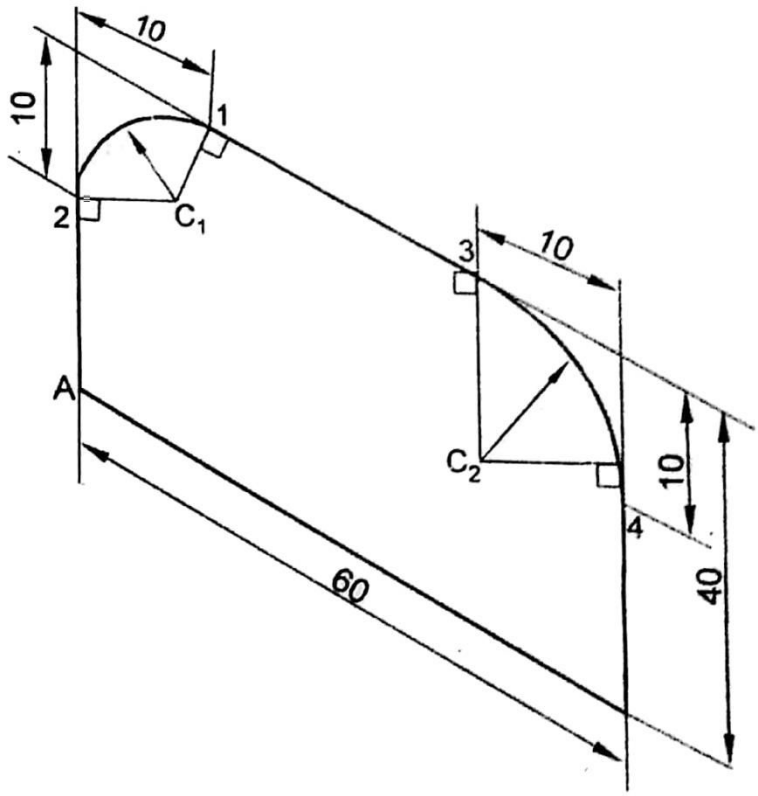

Isometric views of solids

Problem: 4

Draw an isometric view of a square prism having a base with 40mm side and a 60mm long axis, resting on the HP.

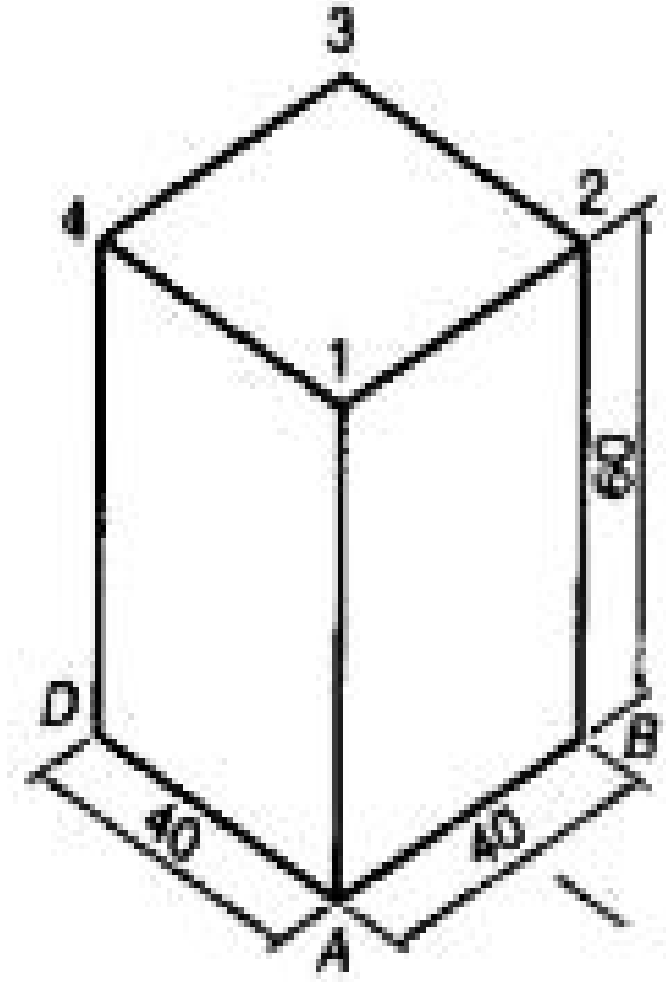

ISOMETRIC VIEW OF SOLIDS CONATINING- NON ISOMETRIC LINES

The inclined lines of an object are represented non isometric lines in isometric projections. These are drawn by one of the following methods

1. **Box Method:**

In this box method, the object is assumed to be enclosed in a rectangular box and both the isometric and non-isometric lines are drawn by locating the corresponding points of contact with the surfaces and edge of the box.

2. **Off-Set Method:**

In this Off-set Method the lines parallel to isometric axes are drawn from every corner or reference of an end to obtain the corner or the reference point at the other end.

The Box Method is generally convenient for solving most of the problems

Problem: 5

Draw isometric view of a hexagonal prism having a base with 30 mm side and a 70mm long axis resting on its base on the HP, with an edge of the base parallel to the VP using Box Method.

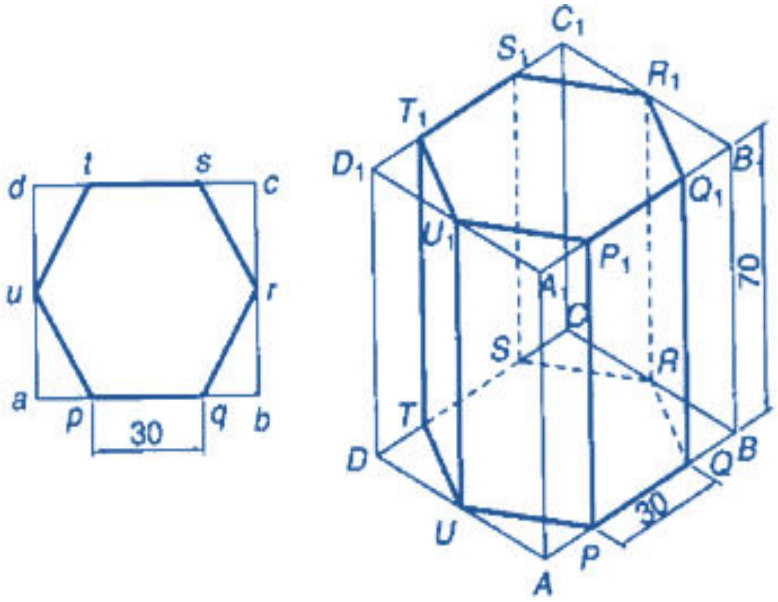

Problem:6

Draw an isometric view of a cylinder, with a 50mm base diameter and 70mm long axis when the base is on the HP.

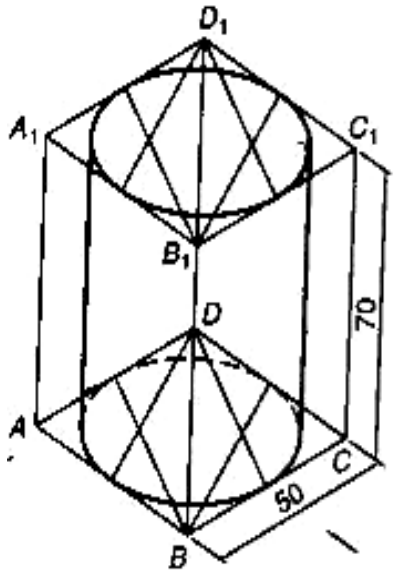

Problem: 7

Draw an isometric view of Cone with a base diameter is 50 mm side and 70mm long axis (a) when the base is on the HP

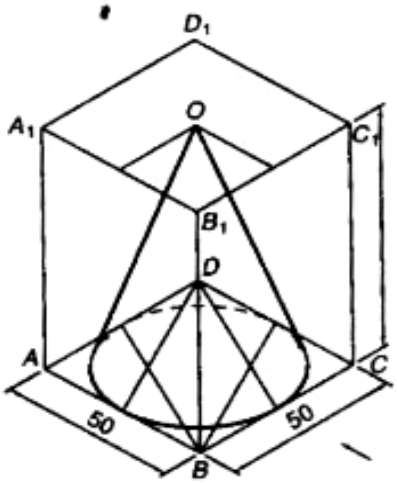

Problem: 8

Draw an isometric view of the given object as shown in fig.

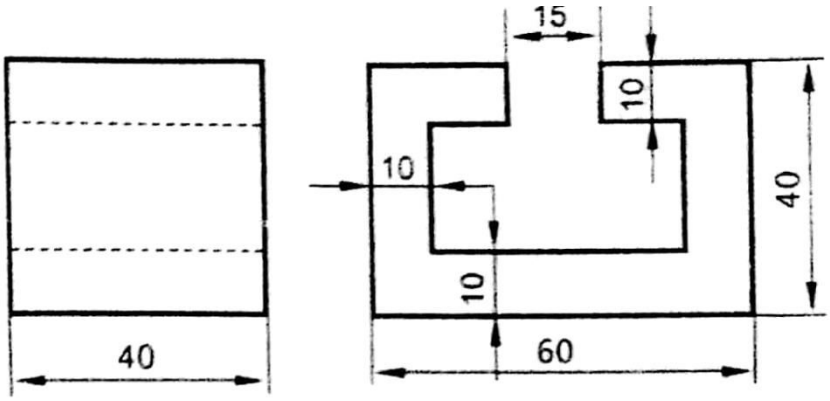

R.S. VIEW ELEVATION

Solution:

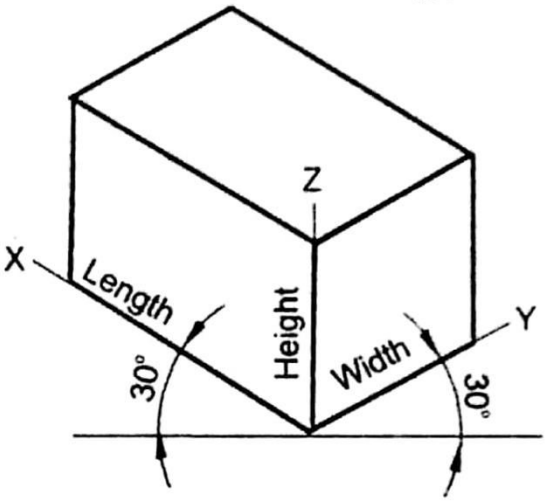

Stage-1

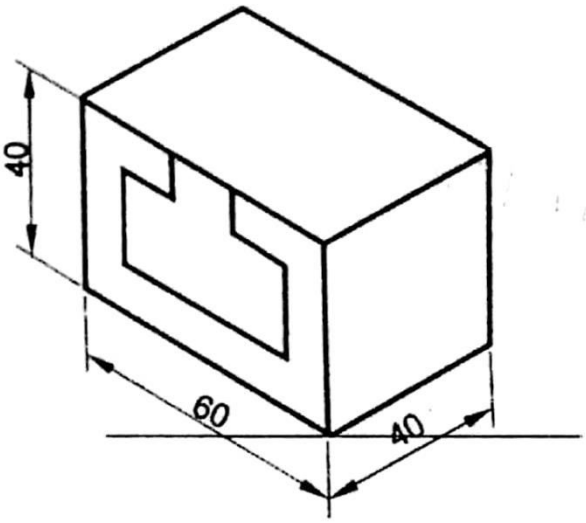

Stage-2

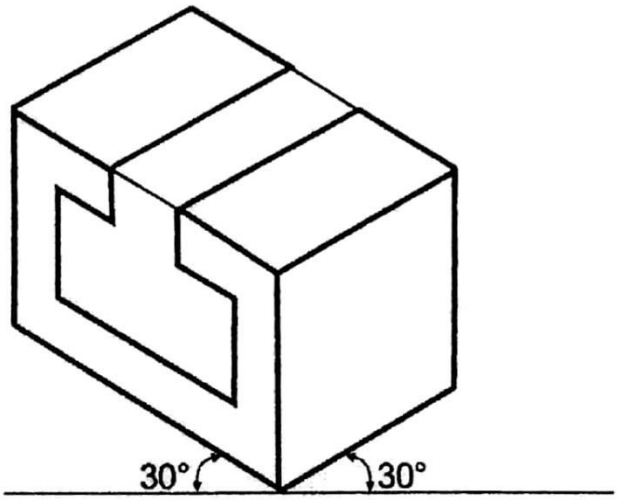

Stage-3

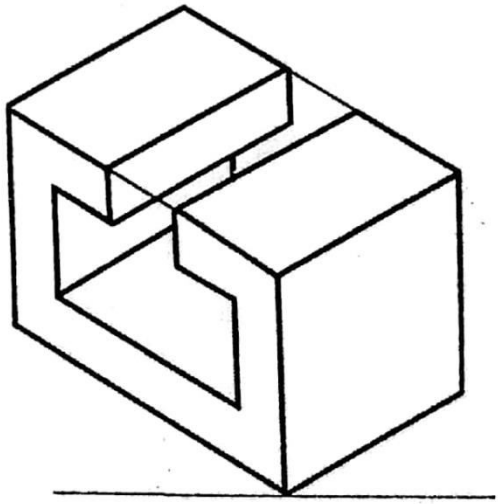

Stage-4
(Isometric view)

- Note the overall dimensions (Length 60 mm, width 40 mm and height 40 mm) of the object.
- Draw the 3 isometric axes and draw the isometric view of the enclosing box. (Select the length axis according to the side view, i.e. if the right side view is given, draw the length axix on the left and if the left side view is given, draw the length axis on the right.)
- Draw the front face (front view) by marking the length on length axix (OX) and height on OZaxis.
- Draw the edges of the object on X-axis.
- Project all the points of the front view on Y-axis and connect the points to complete the side and top faces (step 2, step 3, step 4).
- Make thick outline of the object

Problem: 9

Solved Isometric Views for various objects

Solution:

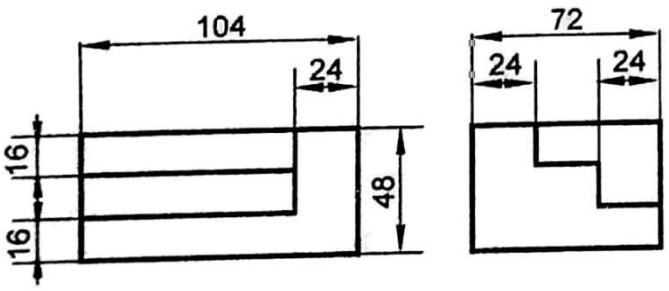

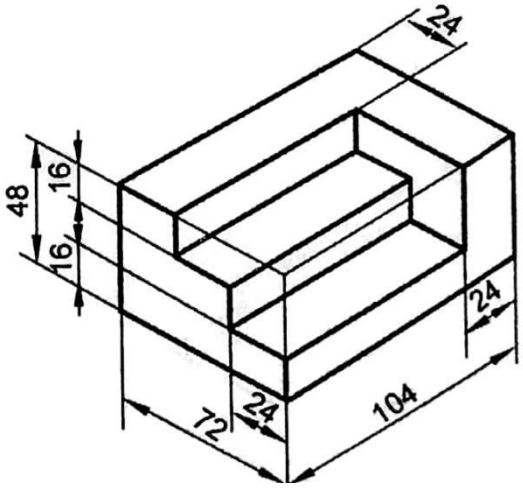

Problem - 10

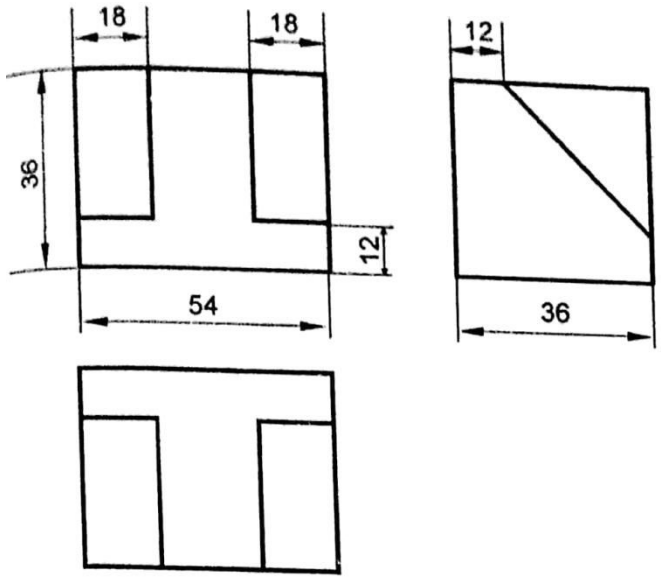

Solution:

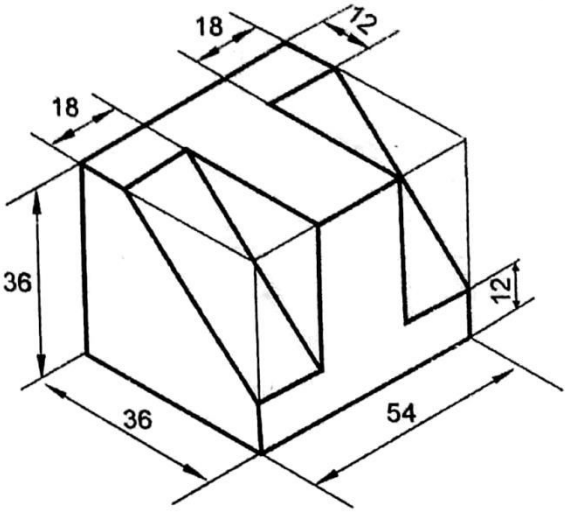

Problem - 11

Solution:

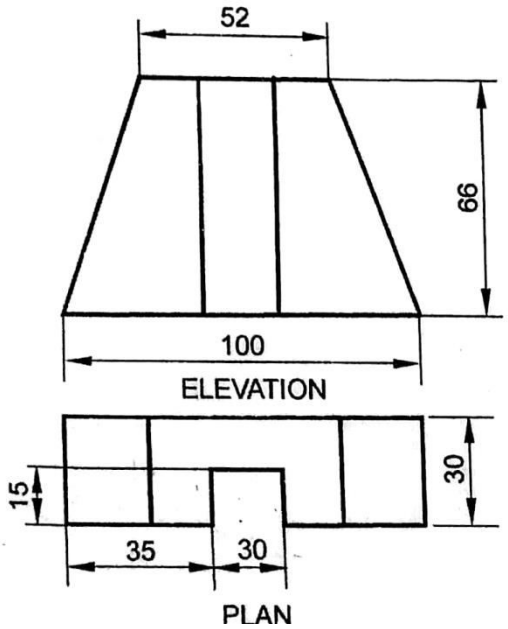

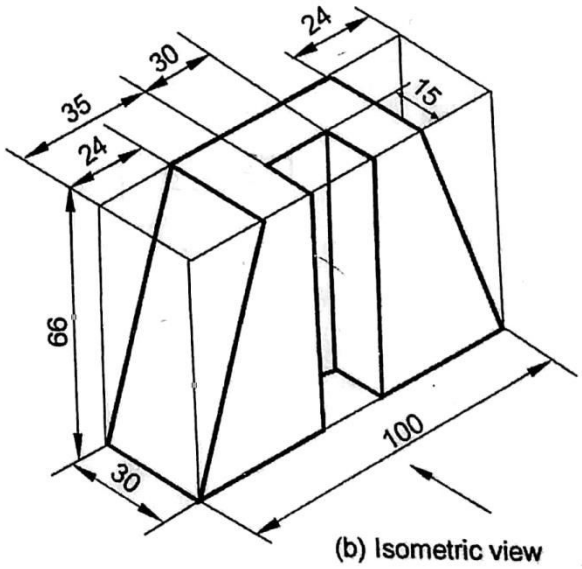

Problem 12:

Solution:

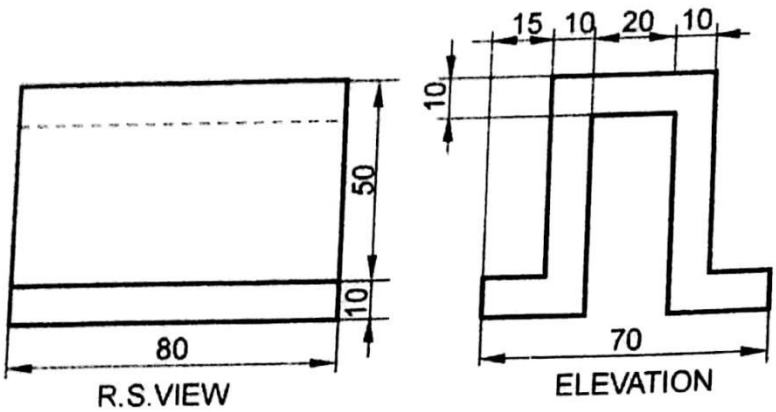

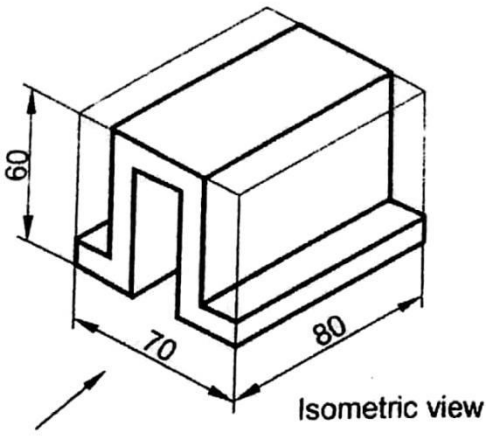

Problem 13:

Solution:

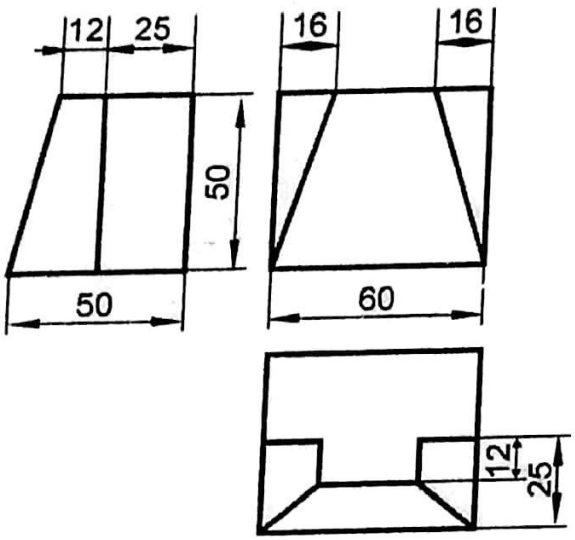

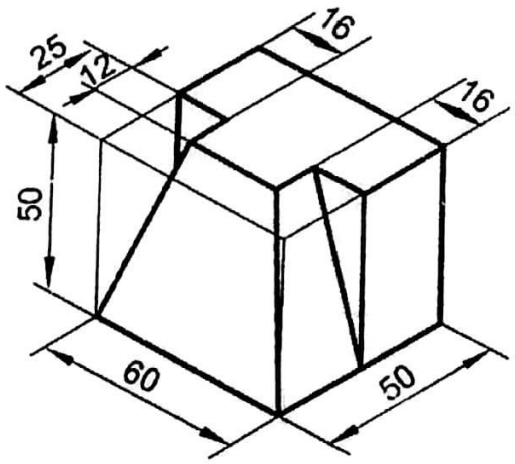

Problem 14:

Solution:

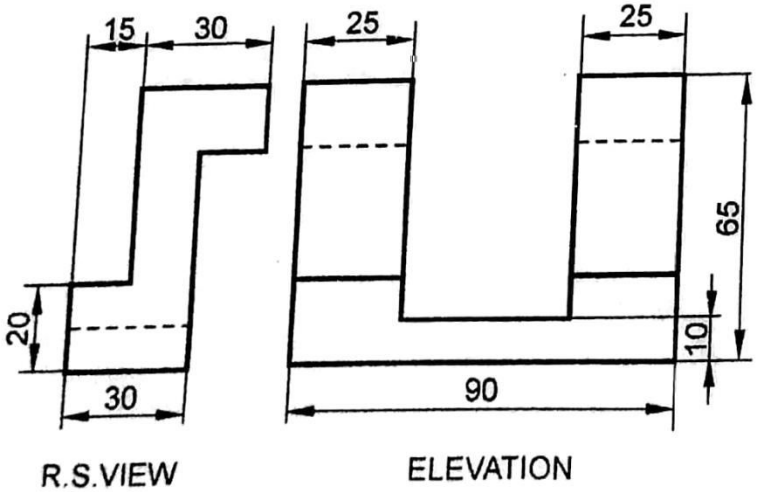

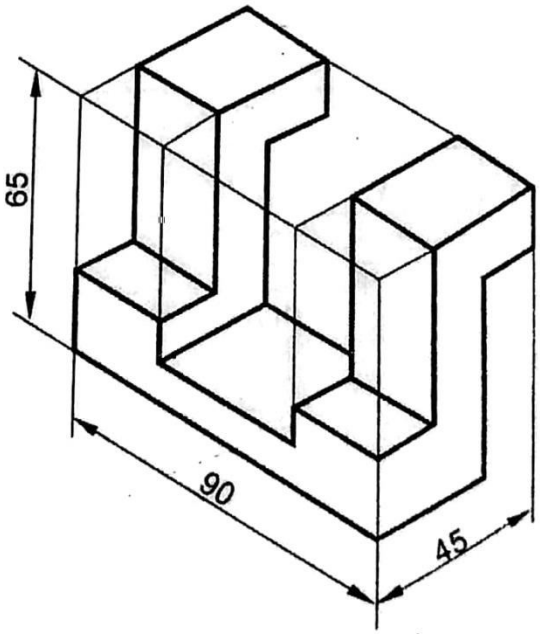

Isometric view

Problem 15:

Solution:

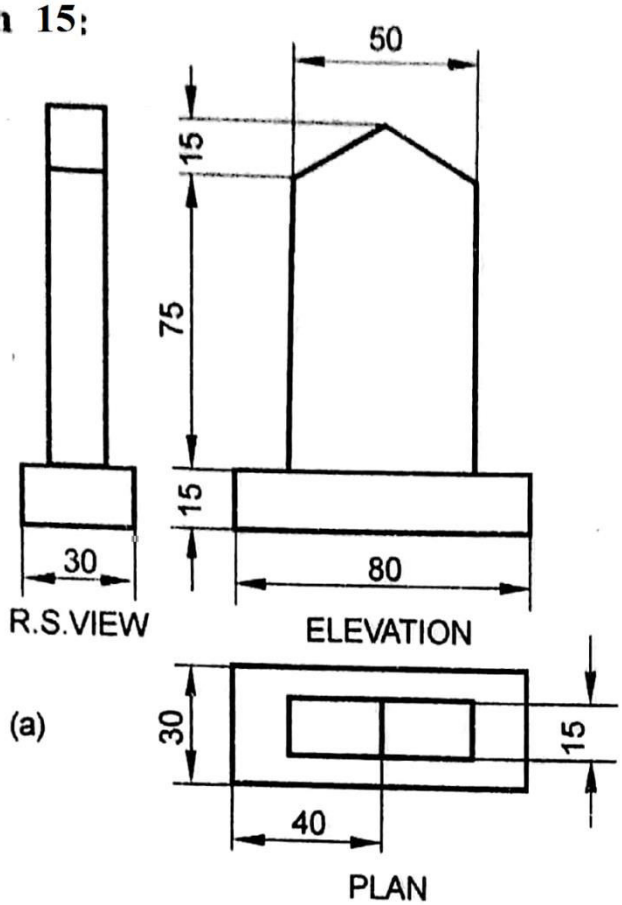

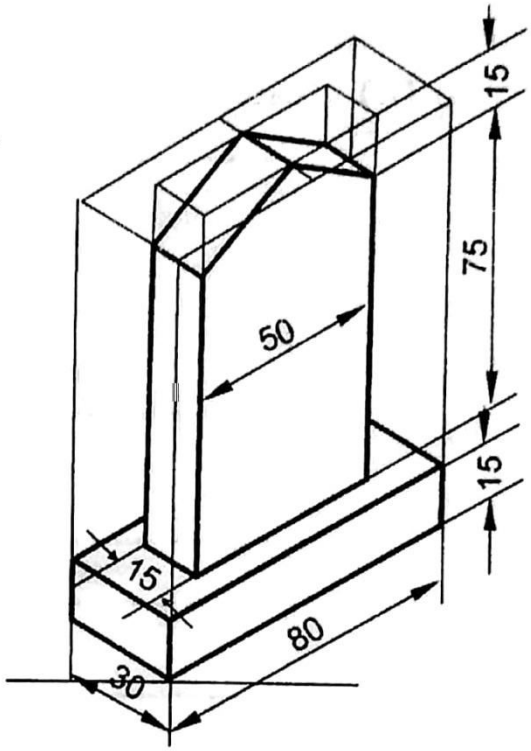

(b) Isometric view

Problem - 16

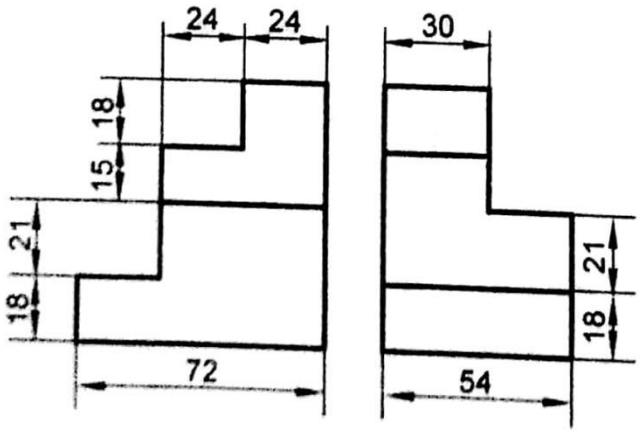

Solution:

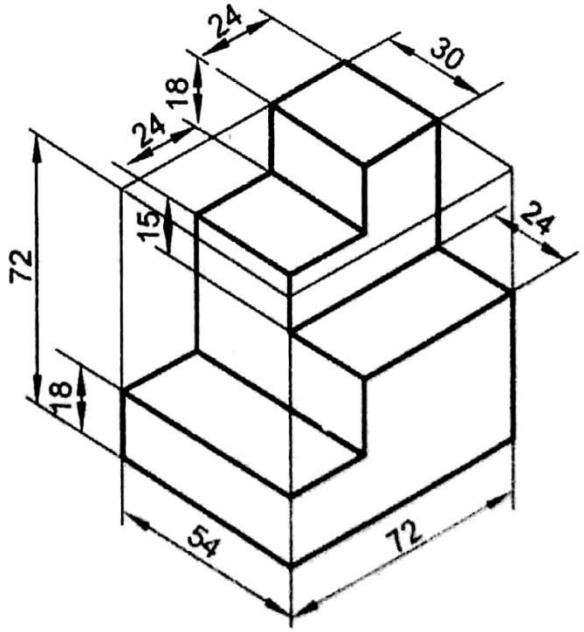

Exercises on Missing Views:

Draw the missing / third view of given orthographic projections.

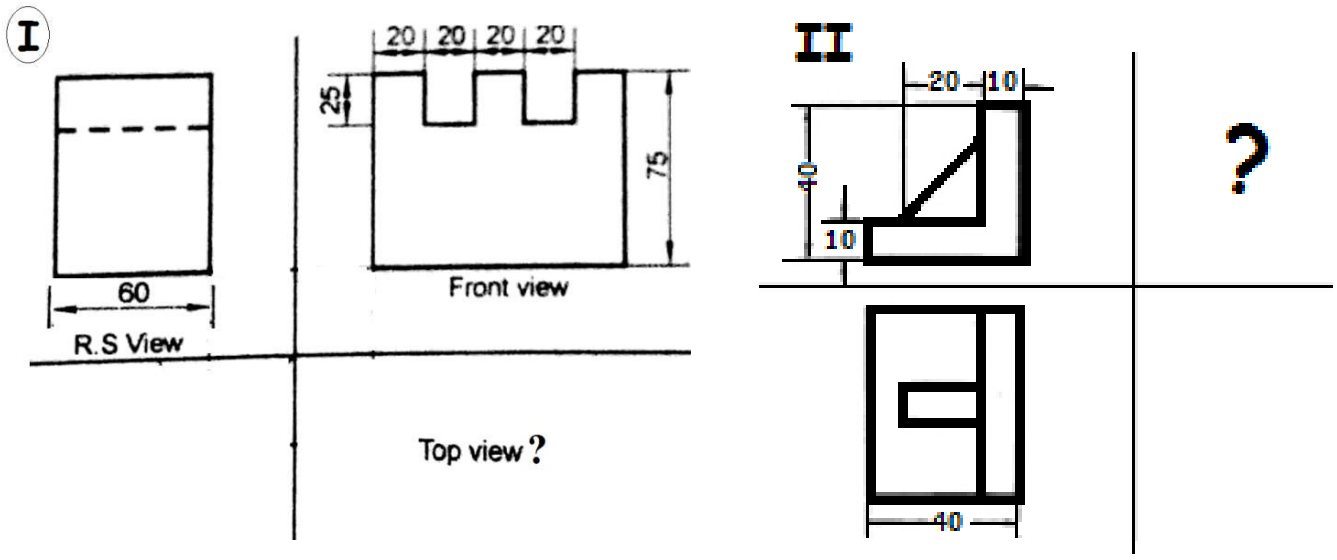

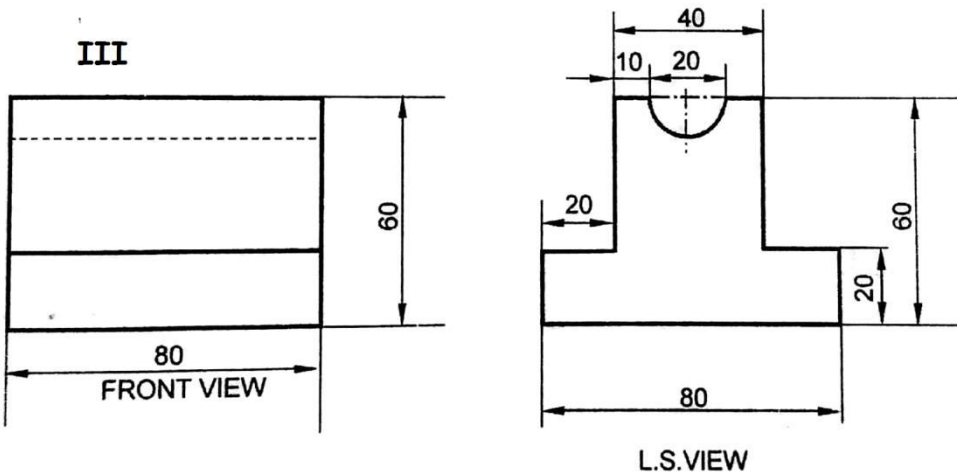

Draw the Top View

Draw Right Hand Side View

IV

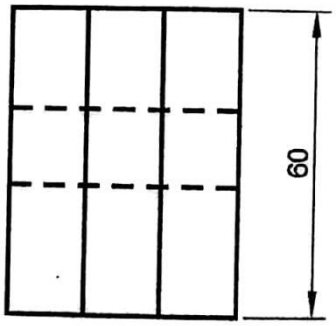

Front view

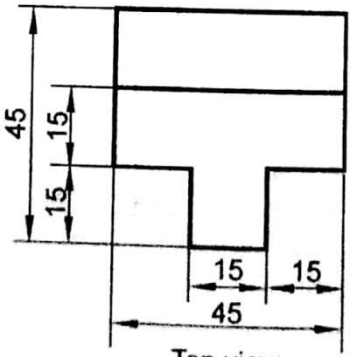

Top view

V Draw Left Hand Side View

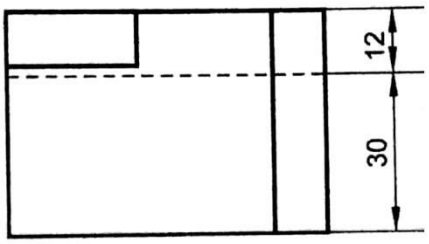

Front view

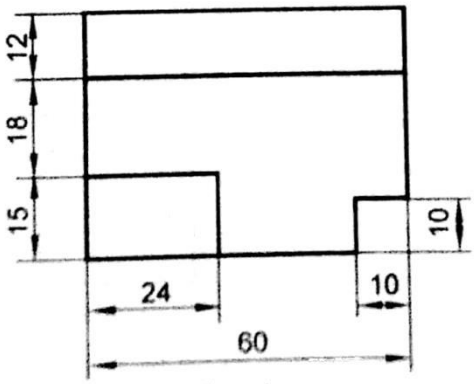

Top view

VI Draw the Top View

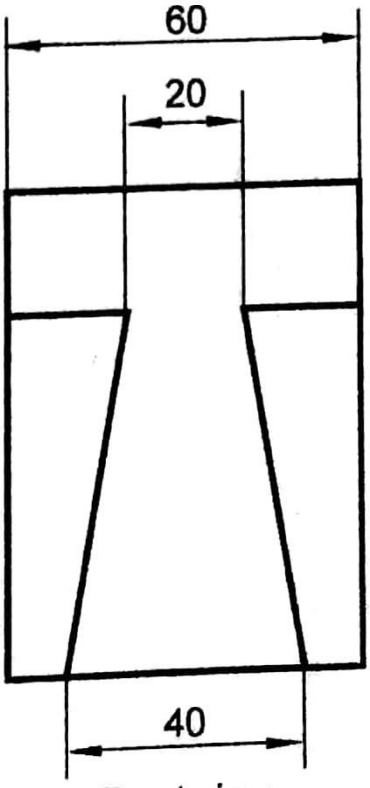

Front view

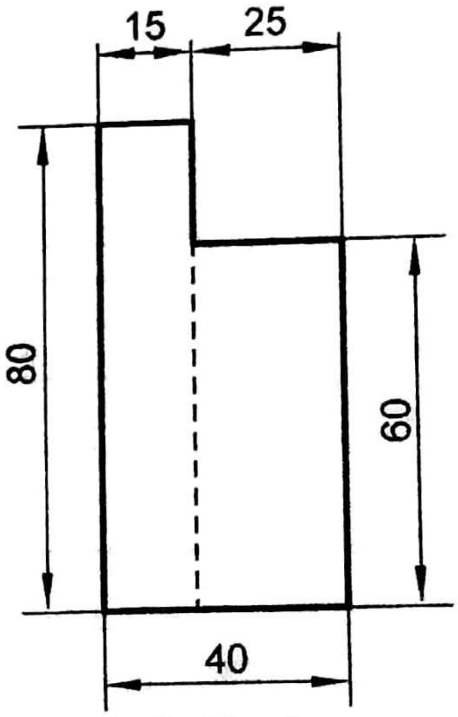

Left side view

Exercises on Isometric Drawing

Draw the isometric view o the given parts shown in orthographic views.

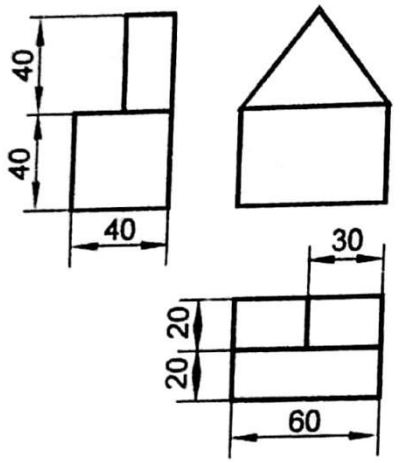

Exercise 1

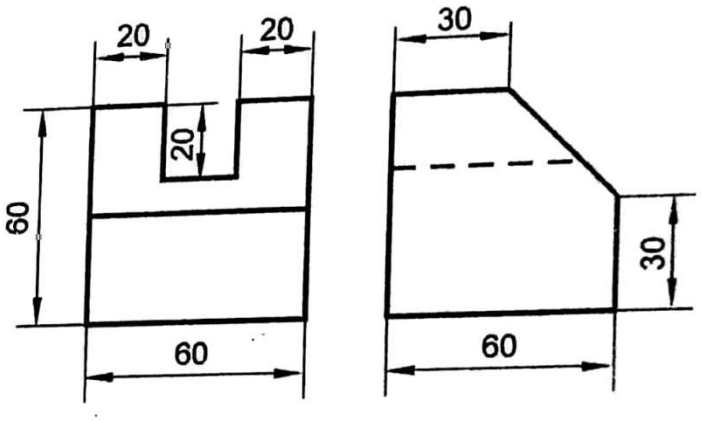

Exercise 2

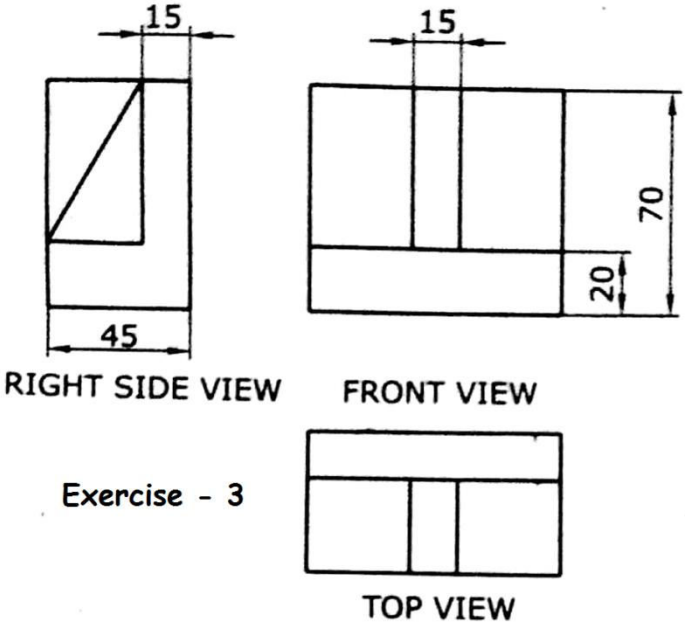

Exercise - 3

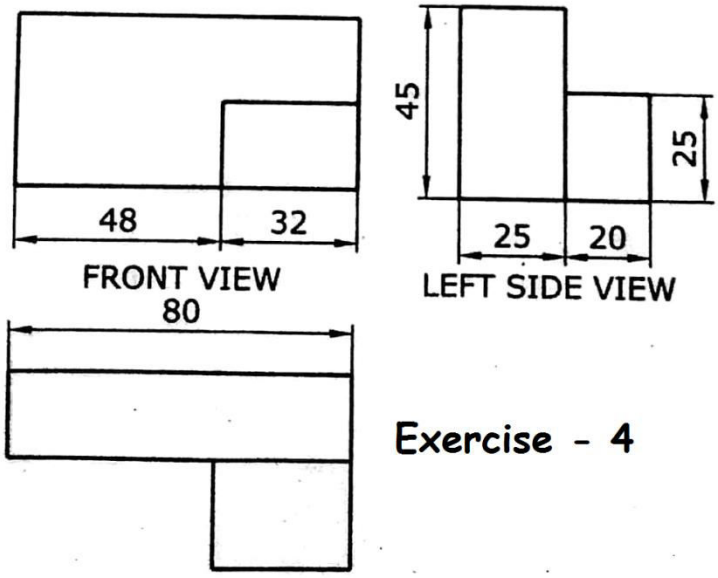

Exercise - 4

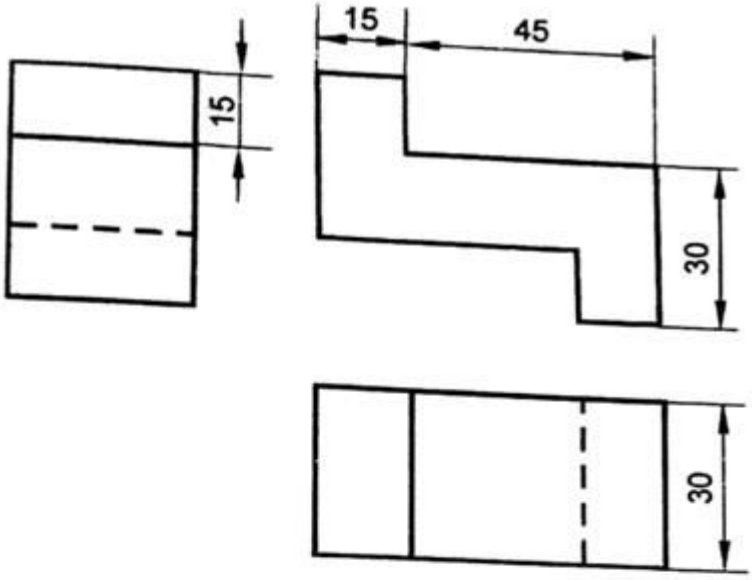

Exercise 5

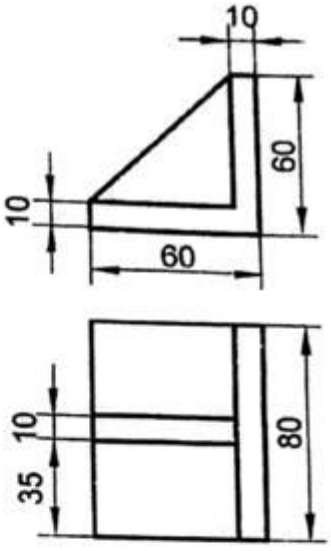

Exercise 8

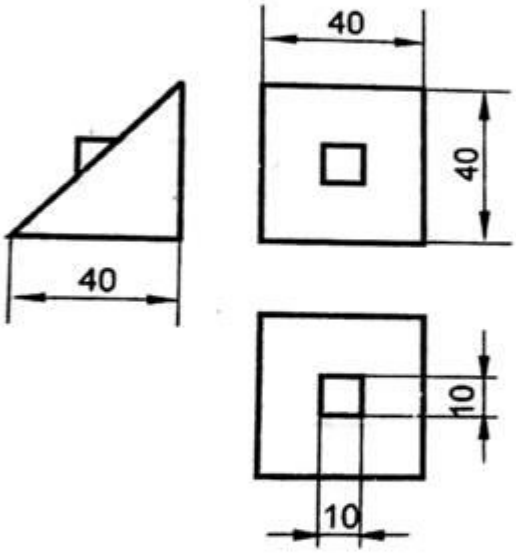

Exercise 7

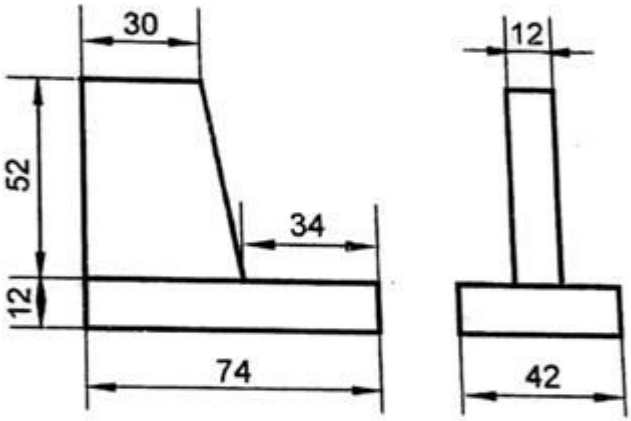

Exercise 6

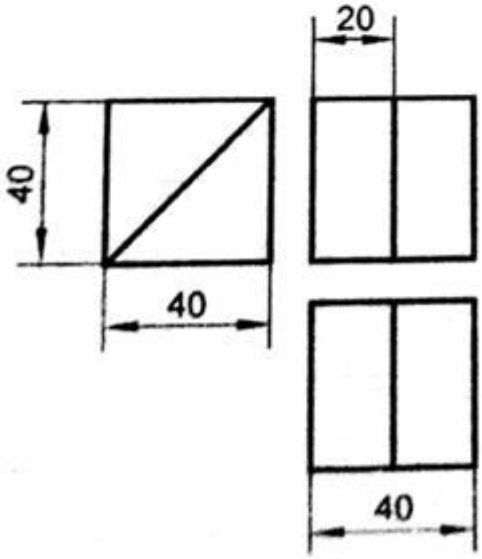

Exercise 9

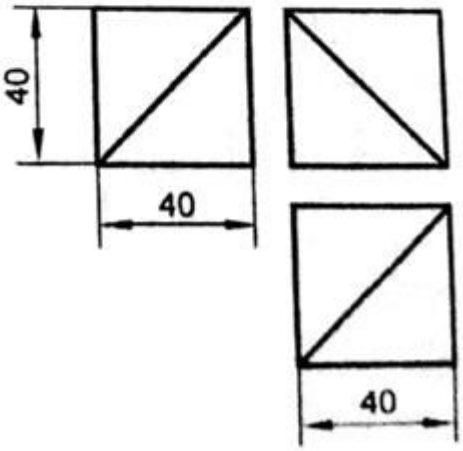

Exercise 10

MODEL QUESTION - 1

PART-A **(3 X 5= 15 Marks)**

Answer all the questions. Each question carries five marks.

1. Draw the projection of a point A which is 30mm above HP and 50mm in front of VP.
2. A 50mm long line is parallel to the HP and 30mm above HP. Its two ends are 35mm and 50mm in front of VP. Draw its projection.
3. Draw the development of a right circular cone of diameter 40mm.

PART-B **(4 X 15= 60 Marks)**

Answer any four questions. Each question carries fifteen marks.

4. A line PQ measuring 75 mm is inclined at an angle of 35° to HP and 50^{0} to VP. The Point P is 20mm above HP and 30mm in front of VP. Draw the projection of straight line PQ.
5. Draw the plan and elevation of cone of base diameter 40mm and height 75mm lying with its slopping side on ground and axis parallel to VP.
6. Draw the development of lateral surface of the frustum of square pyramid base 40mm and frustum height 30mm and top base 20mm.
7. A hexagonal pyramid of base side 25mm and axis 55mm long rest on its base on HP with two base perpendiculars to VP. It is cut by a plane perpendicular to VP and inclined at 30° to HP meeting the axis at 20mm from the vertex. Draw the sectional plan and true shape of the section.
8. Draw the isometric view for the given orthographic views. (Fig. 1)
9. Draw the missing view for the given orthographic views. (Fig. 2)

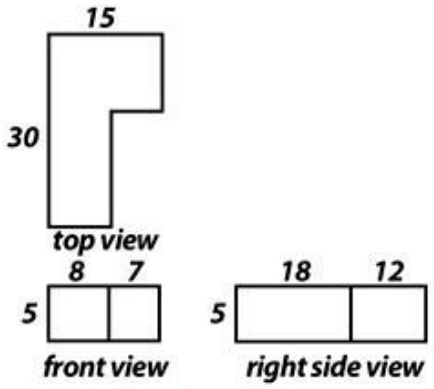

Fig. 1

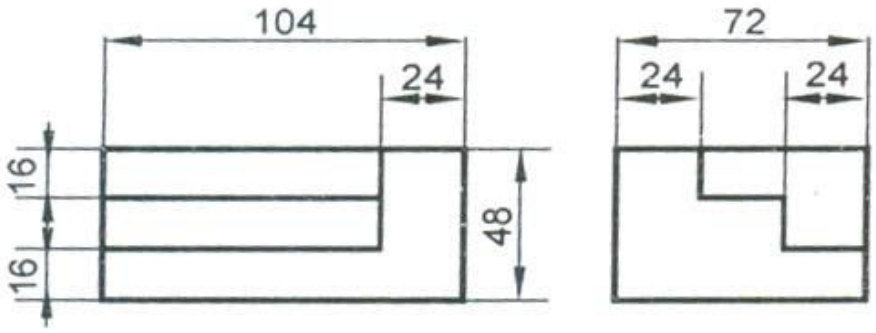

Fig. 2

MODEL QUESTION - 2

PART-A (3 X 5= 15 Marks)

Answer all the questions. Each question carries five marks.

1. A point G is 50mm above HP and 30mm behind VP. Draw the projection.
2. A line AB 30 mm long is perpendicular HP and parallel to VP. The end is 15mm above HP and 20mm in front of VP. Draw the projection of lines.
3. Draw the projection of a cylinder of base diameter 40mm and axis 70mm.

PART-B (4 X 15= 60 Marks)

Answer any four questions. Each question carries fifteen marks.

4. A line AB 60mm long has its end A is 25mm in front of VP and 20mm above HP, and inclined at 60° to HP. Draw the projection of line AB.
5. Draw the projection of a cube 35mm side resting on HP on one of its edge such that the edge makes an angle of 30° to HP and perpendicular to VP.
6. A cylinder of diameter 40mm and height 50mm rest on its base on HP. It is cut by a Plane perpendicular to VP and inclined at 50° to HP. The cutting plane meets the axis at a distance of 15mm from the top. Draw the front view and sectional top view.
7. Draw the development of surface of the given funnel shown below

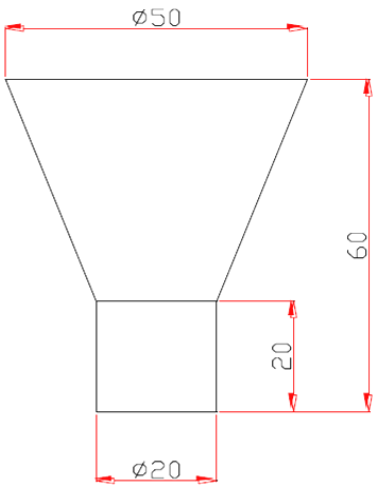

8. Draw the missing view for the given orthographic views

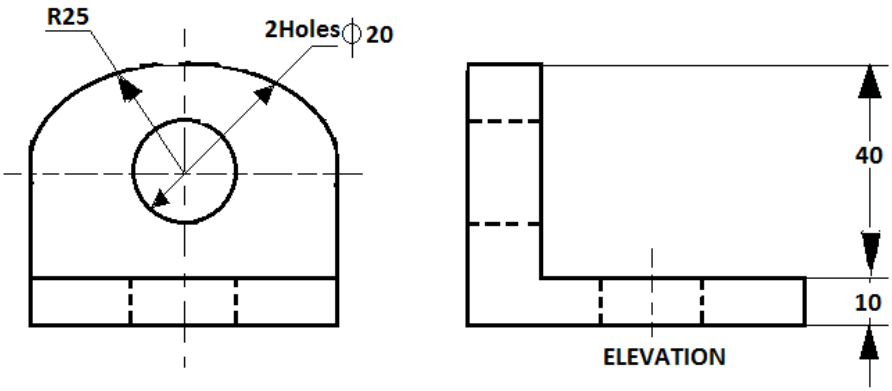

9. Draw the isometric view for the given orthographic views.

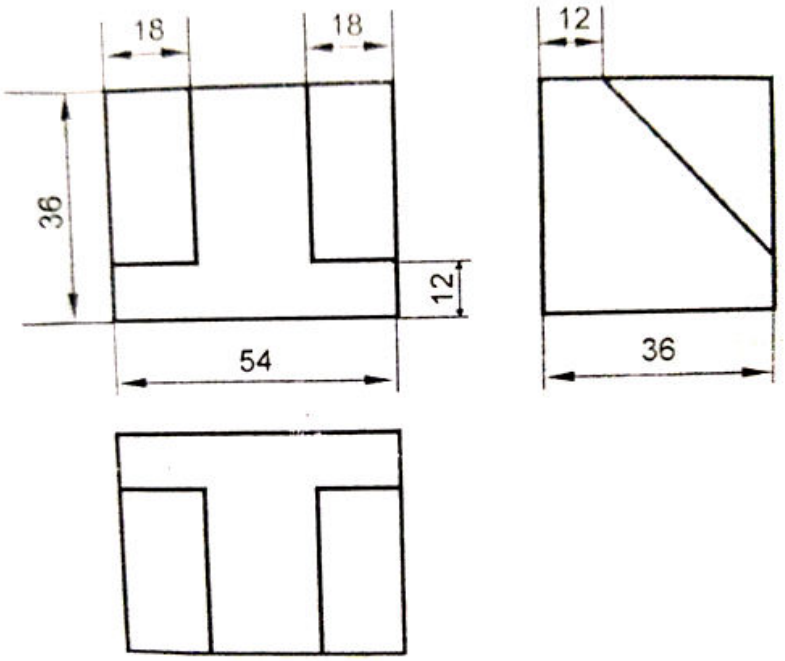

April 2018

Time – Three hours
(Maximum Marks: 75)

[N.B: (1) Answer all questions in the drawing sheet.
(2) First angle projection is to be followed.
(3) All dimensions are in mm.
(4) Credit will be given for neatness.
(5) Assume missing dimensions suitably.]

PART – A

(Marks: 3 x 5 = 15)

[N.B:- (1) Answer ALL questions.
(2) All questions carry equal marks.]

1. **Draw the projection of a Point A, 35mm above HP and 25mm in in front of VP**

2. Draw the development of the lateral surface of a right circular cylinder of base diameter 40mm and axis 60mm.

3. Draw the projections of a triangular pyramid of 25mm side of base and height 65mm with its base on the HP, when one base side is parallel to VP and nearer to it.

PART – B

(Marks: 4 x 15 = 60)

[N.B:- (1) Answer any FOUR questions.
(2) All questions carry equal marks.]

4. A straight line AB 45mm is parallel to V.P. and inclined at 35^0 to H.P. The line is 25mm in front of V.P and the end A is 20mm above H.P. Draw the projections.

5. Draw the development of a rectangular duct as shown in figure 1.

6. A cone of base diameter 40mm and axis height 70mm is resting on HP on a point on the circumference of the base with its axis inclined at 40° to VP and parallel to HP. Draw the projections of cone.

7. A hexagonal prism of 20mm base side and axis 60mm long is resting on HP by its base, such that one of its rectangular face is parallel to VP. It is cut by a cutting plane, perpendicular to HP and parallel to VP and passes through a point 6mm away from the axis. Draw the sectional front view and top view.

8. Draw the isometric view of the object shown in the figure 2.

9. Draw the isometric view of the object shown in the figure 3.

[Turn over...

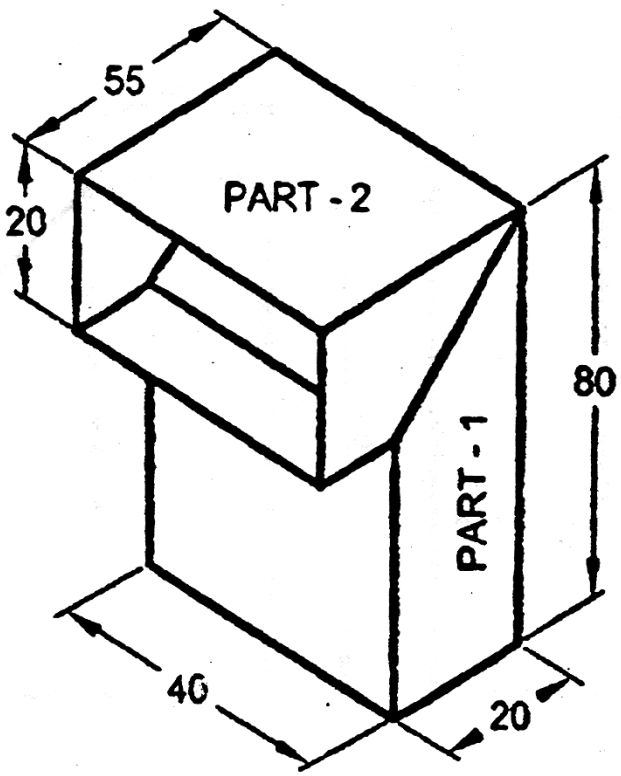

Figure 1 (شكل 1)

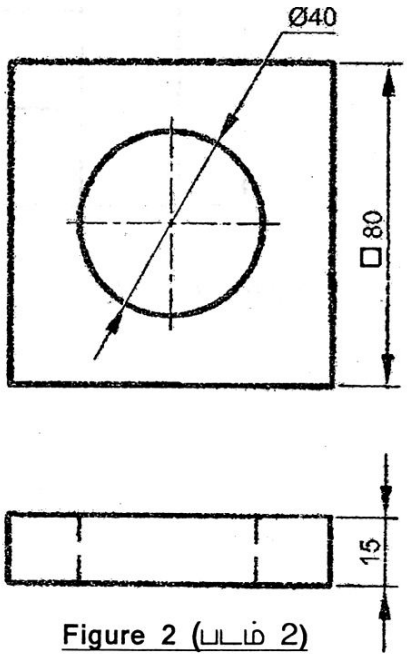

Figure 2 (شكل 2)

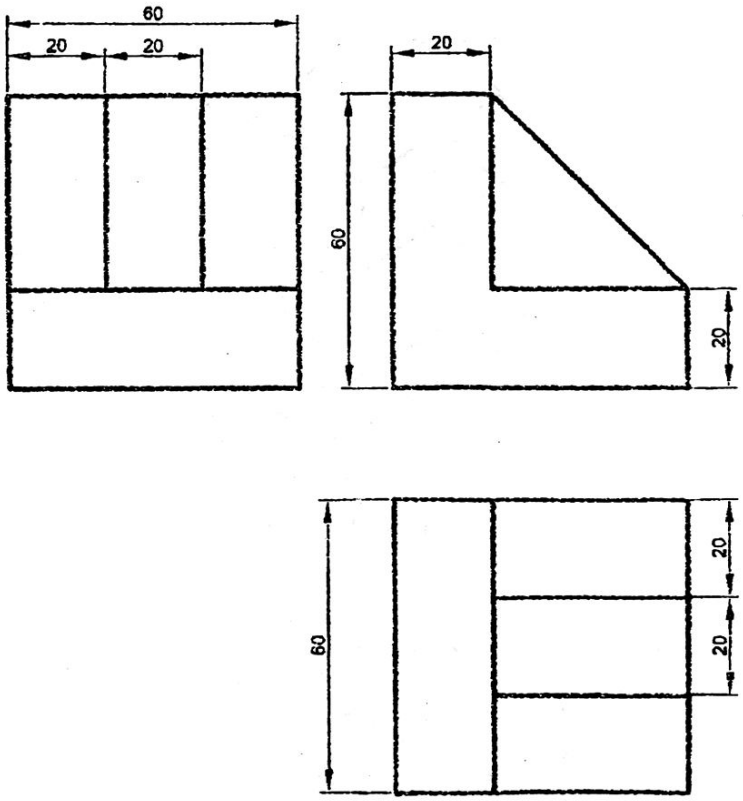

Figure 3 (شكل 3)

October 2016

Time – Three hours
(Maximum Marks: 75)

[N.B: (1) Answer all questions in the drawing sheet.
(2) First angle projection is to be followed.
(3) All dimensions are in mm.
(4) Credit will be given for neatness.
(5) Assume missing dimensions suitably.]

PART – A

(Marks: 3 x 5 = 15)

[N.B:- (1) Answer ALL questions.
(2) All questions carry equal marks.]

1. A point 'C' is 50mm below the HP and 30mm behind the VP. Draw the projections of the point.

2. Draw the development of the lateral surfaces of a right hexagonal prism of side of base 30mm and axis 60mm long.

3. A triangular prism, side of base 35mm and height 60mm rests with its base on HP, such that one of its rectangular faces is perpendicular to VP. Draw its projections.

PART – B

(Marks: 4 x 15 = 60)

[N.B:- (1) Answer any FOUR questions.
(2) All questions carry equal marks.]

4. A straight line 50mm long is inclined at 30° to the HP and in the VP. The end point nearest to the HP is 40mm above the HP. Draw its projections.

5. Draw the development of a funnel as given in the figure 1.

6. A cylinder of diameter 70mm and axis 100mm long is lying on HP with its axis inclined at 30° to VP. Draw its projections.

7. A hexagonal pyramid of base side 25mm and altitude 70mm rests on its base on the HP with two edges of the base perpendicular to the VP. A cutting plane parallel to the HP cuts the pyramid at a height of 25mm above the base. Draw the elevation and sectional plan.

8. Draw the isometric view of the object given in figure 2.

9. Draw the isometric view of the object given in figure 3.

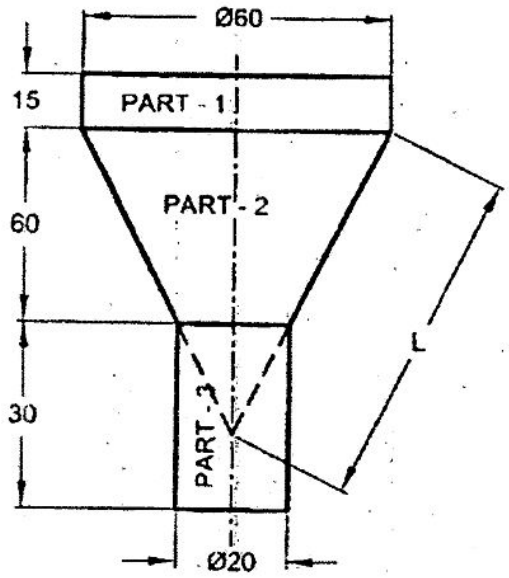

Figure 1 (شكل 1)

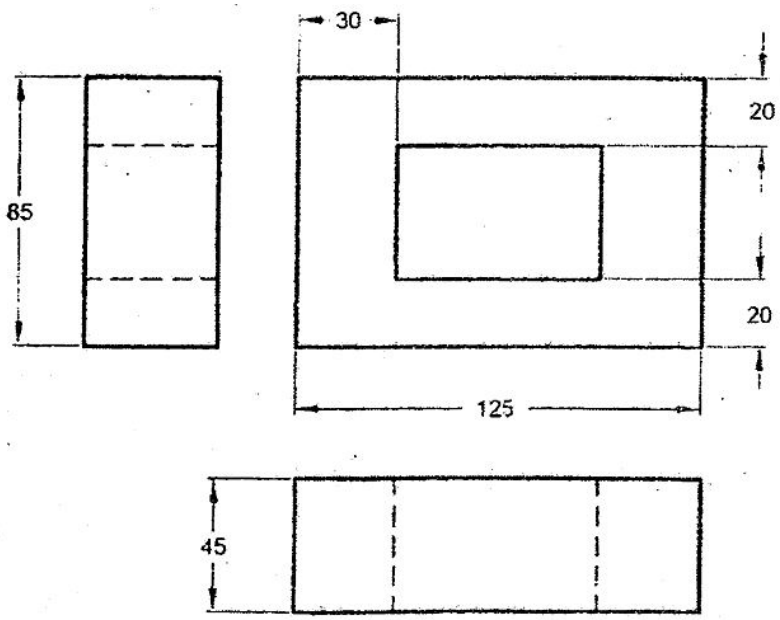

Figure 2 (شكل 2)

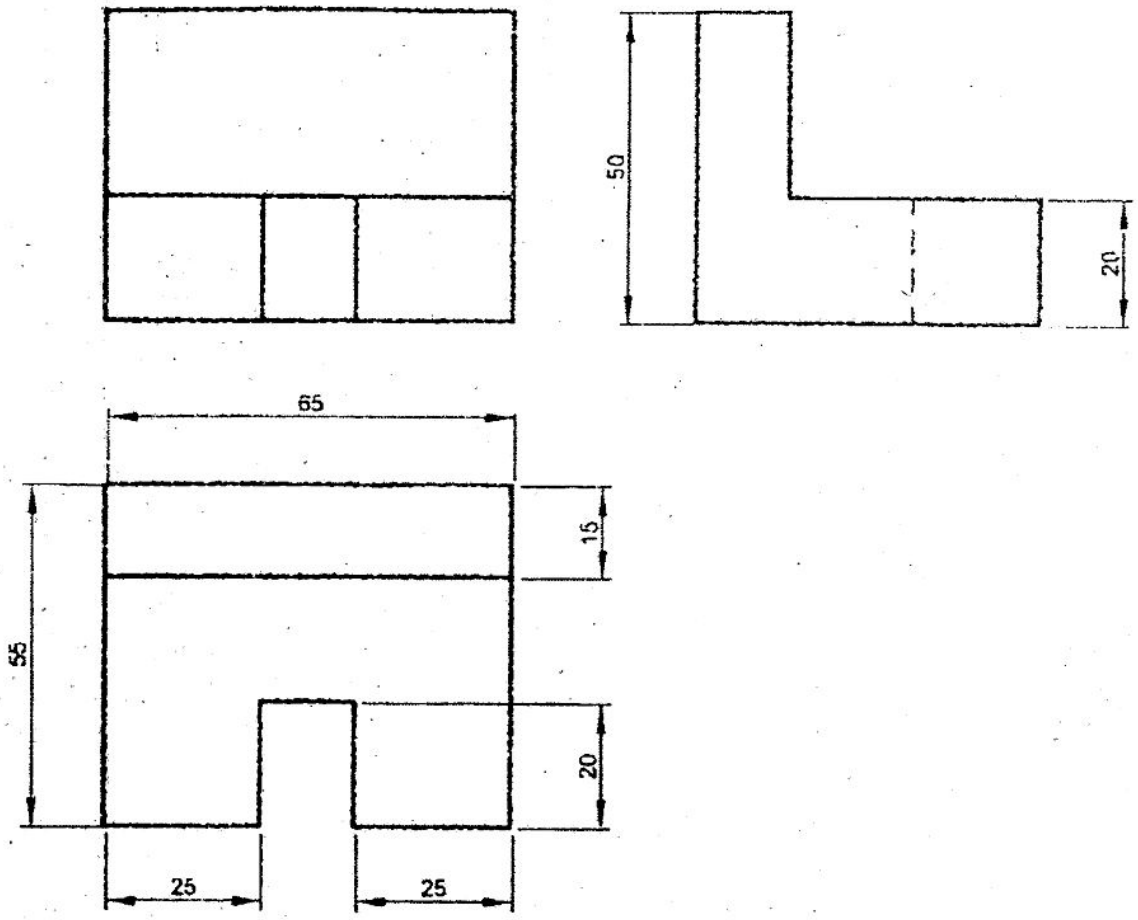

Figure 3 (شكل 3)

384

April 2017

Time – Three hours *Maximum Marks: 75)*

[N.B: (1) Answer all questions in the drawing sheet.
(2) First angle projection is to be followed.
(3) All dimensions are in mm.
(4) Credit will be given for neat drawings.
(5) Assume missing dimensions suitably.]

PART – A

(Marks: 3 x 5 = 15)

[N.B:- (1) Answer ALL questions.
(2) All questions carry equal marks.]

1. A point S is situated 42mm above the HP and 25mm in front of the VP. Draw the projections of the point.
2. Draw the development of hexagonal prism of base side 15mm and the axis height 60mm.
3. Draw the projections of a cylinder of diameter 40mm and height 60mm. Its axis is perpendicular to VP and base is resting on the ground.

PART – B

(Marks: 4 x 15 = 60)

[N.B:- (1) Answer any FOUR questions.
(2) All questions carry equal marks.]

4. A line MN, 55mm long is parallel to VP and inclined at 30° to HP. End M is 25mm above HP and 20mm in front of VP. Draw its projections.
5. Draw the development of the cone given in figure 1.
6. A triangular prism of base side 20mm and height 70mm is resting on one of its base edge on the HP. Its axis is inclined at 45° to HP. Draw its projections.
7. A cone of base diameter 30mm and altitude 60mm resting on the base with its axis perpendicular to VP. It is cut by a cutting plane parallel to VP meeting at a distance of 20mm from the vertex. Draw the sectional front view and top view.
8. A hexagonal pyramid of base side 20mm and height 70mm resting on one of its corner edge and containing base edge is inclined at 20° to the HP with its axis parallel to both the planes. It is cut by a cutting plane inclined at 45° to HP in the axis at a distance of 20mm from the base. Draw the projections of front view, sectional top view and true shape of the section.
9. Draw the isometric view of the machine part shown in figure 2.

[Turn over.....

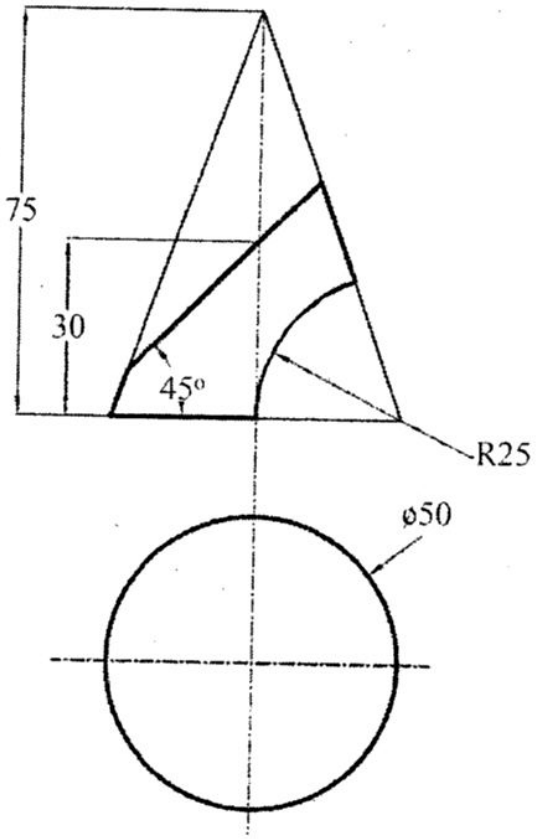

Figure 1 (الشكل 1)

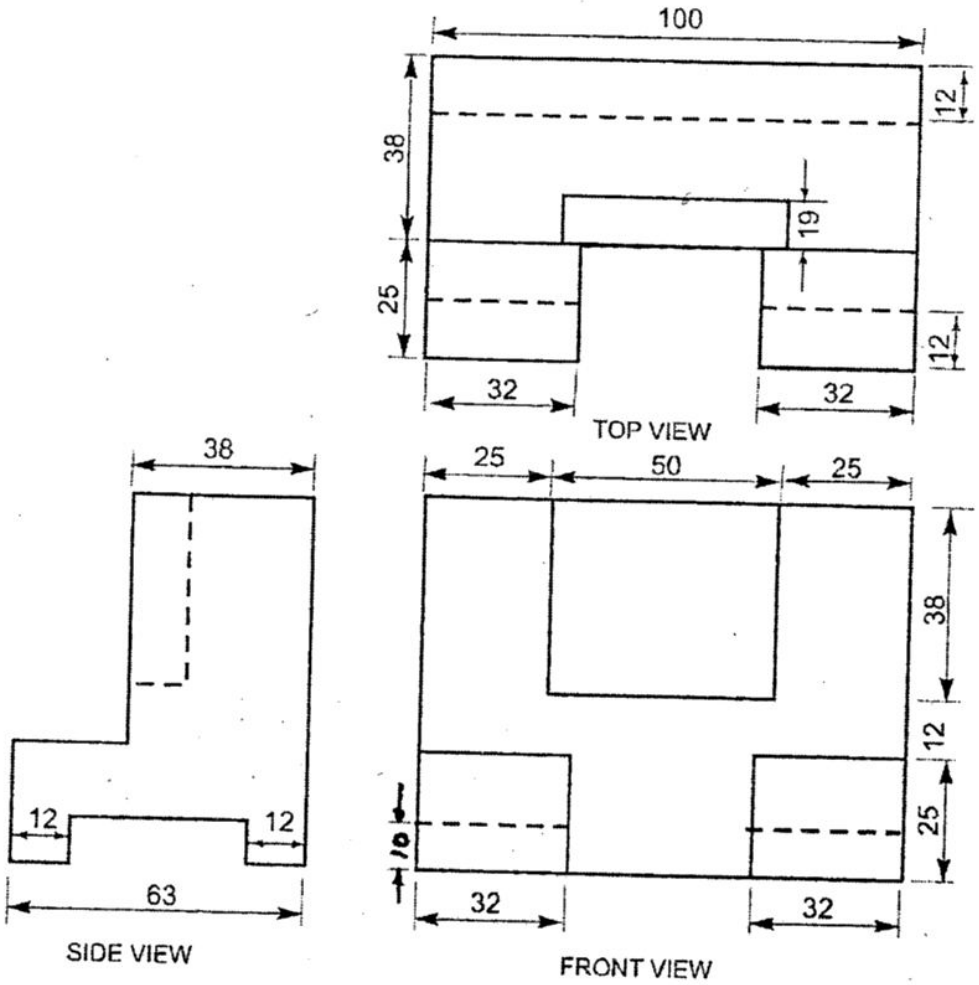

Figure 2 (الشكل 2)

October 2017

Time – Three hours
(Maximum Marks: 75)

[N.B: (1) Answer all questions in the drawing sheet.
(2) First angle projection is to be followed.
(3) All dimensions are in mm.
(4) Credit will be given for neatness.
(5) Assume missing dimensions suitably.]

PART – A
(Marks: 3 x 5 = 15)

[N.B:- (1) Answer ALL questions.
(2) All questions carry equal marks.]

1. Draw the projection of a point H, which is in HP and 30mm behind VP.
2. Draw the development of a regular hexagonal prism of base side 20mm and altitude 60mm.
3. A cone of base 30mm and axis 70mm long is resting on its base on the ground. Draw the front view and top view.

PART – B
(Marks: 4 x 15 = 60)

[N.B:- (1) Answer any FOUR questions.
(2) All questions carry equal marks.]

4. A straight line 60mm long is inclined at 45° to HP and 30° to VP. Its one end is in HP and 40mm in front of VP. Draw its projection.
5. Draw the development of the cylinder shown in figure 1.
6. Draw the projections of a regular cylinder of base diameter 35mm and 100mm long resting with its base such that its axis is inclinded at 30° to VP.
7. A hexagonal pyramid of base edge 30mm and altitude 60mm is resting on the ground with one of its base edge perpendicular to VP. It is cut by a cutting plane inclined at 30° to HP at 20mm from its vertex in the axis. Draw its front view, sectional top view and true shape of the section.
8. A triangular prism of base side 25mm and 40mm long resting on the ground with one of its rectangular face and axis parallel to HP. It is cut by a cutting plane inclined at 45° to the HP at a distance of 15mm from the base nearer to VP in its axis. Draw the front view, sectional top view and true shape of the section.
9. Draw the isometric view of the machine part given in figure 2.

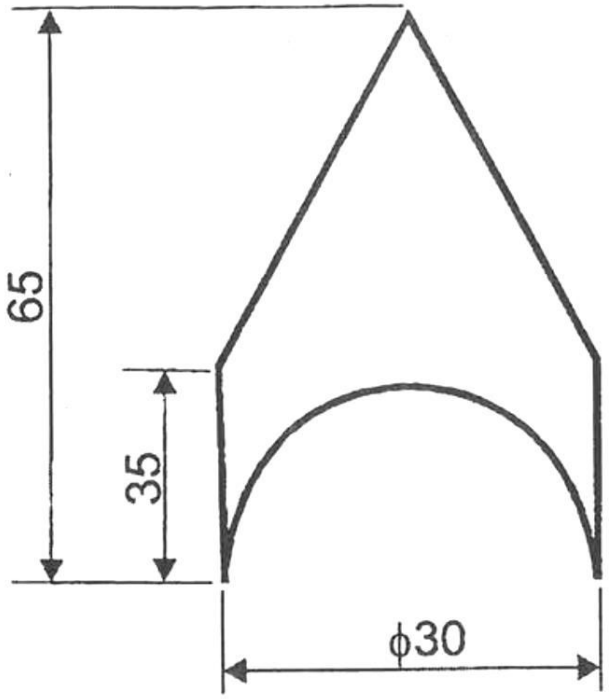

Figure 1 (شكل 1)

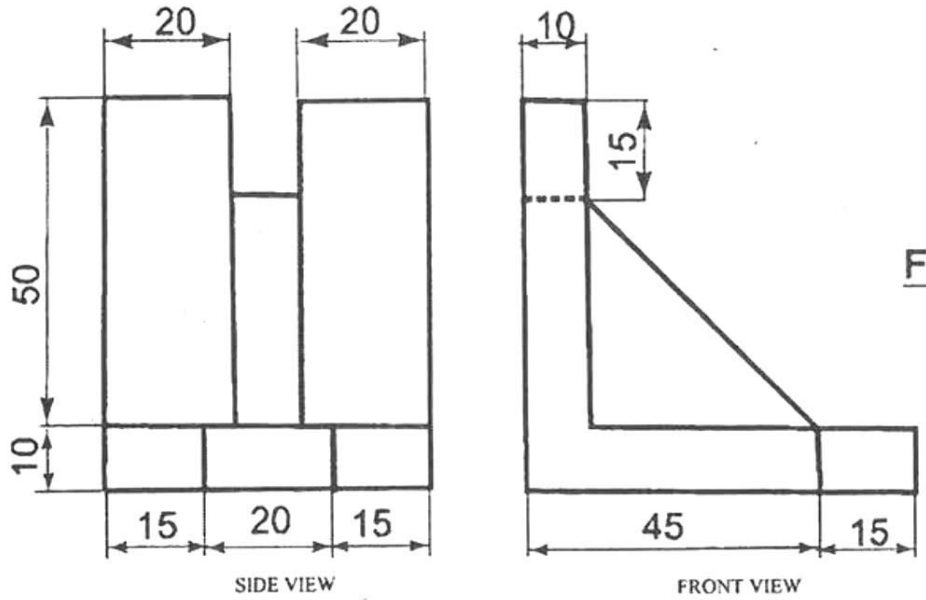

Figure 2 (شكل 2)

VISION

"To be an Institute of Excellence in Technical Education and Training of individuals , Focusing on the needs of the Nation and Society in tune with Technological Developments"

MISSION

"Our Mission is to Produce Disciplined and Quality Technocrats through Academic Programme of Noted Excellence to Serve the Society"

QUALITY POLICY

Virudhunagar S. Vellaichamy Nadar Polytechnic College intends to produce a disciplined and quality technocrats by imparting value added technical education and training by reinforcing our bonds with industry, parents, alumni and students and to continuously develop an innovative and excellence in every sphere of education, faculty improvement and all facilities through continual improvement of quality management system with whole human development